ITEM	DRAWING No	DESCRIPTION	QTY.	MASS (kg)
1	OEM-80-LR-40-316L	80NB LONG RADIUS BEND SHED 40 316L S/S	1	2.06
2	OEM-80NB-JIS30K-P-316L	80NB PLATE FLANGE JIS 30 K 316L S/S	1	5.32
3	OEM-80NB-300-SO-316L	80NB - 300lb SLIP ON FLANGE 316L S/S	1	6.08
4	13-2919-8-1	80NB SHED 40 PIPE 316 S/S	1	4.67

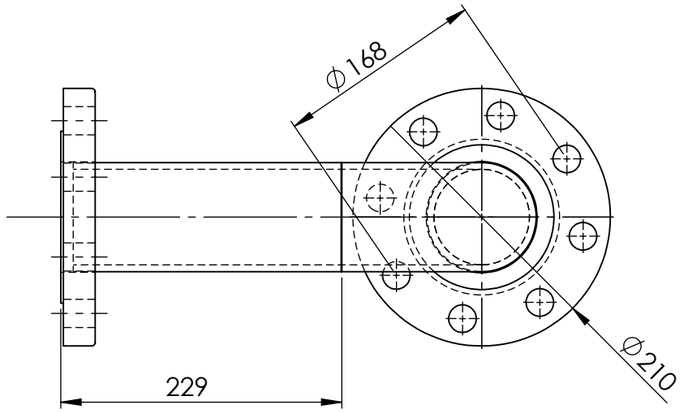

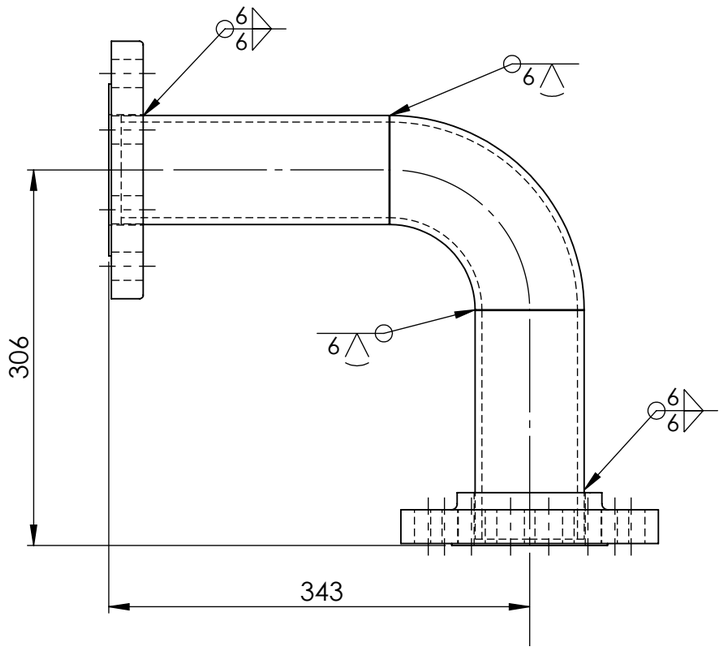

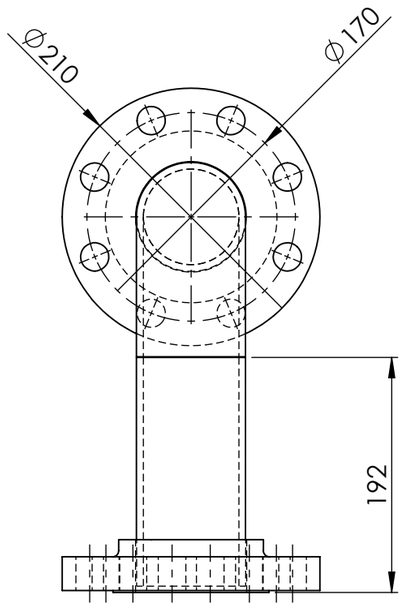

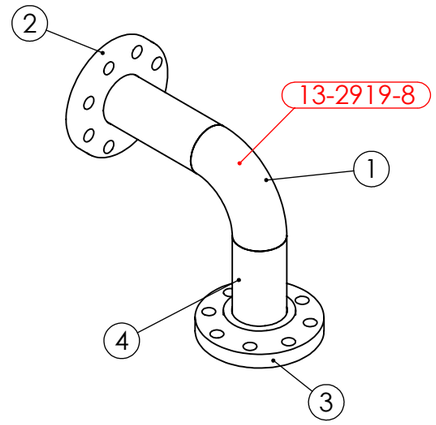

PIPE LABEL - 13-2919-8

ISSUED FOR CONSTRUCTION
17/11/25

PIPEWORK MANUFACTURED OF A JIG - FLANGES AS PER DRAWING
DIMENSIONS ARE APPROXIMATE

UNIT 11 VALVE 2919 PIPE 8 WEIGHT - 18.13 kg

REV	NAME & DATE	DESCRIPTION

UNLESS OTHERWISE SPECIFIED:
TOLERANCES: MACHINE + / - 0.25mm
FABRICATION + / - 1.0 mm

THIS DRG SUPPLIED BY
RODDY ENGINEERING
14 Waratah St, TUMUT NSW 2720
Ph: 02 6947 4039

DRAWING No. 13-2919-8 REV:

DRAWN N DE BRUYN 19/09/2025
DRAWING CHECKED
DESIGNED
DESIGN CHECKED
SCALE 1:5
WORK ORDER No
APPROVED
SECTION No/KKS
A3 SHEET SIZE

snowyhydro LIMITED

M2 POWER STATION UNIT 13
VALVE 2919 DOWN STREAM PIPE 8

SMA-DRG-NO

REV

SHEET 1 OF 1

0,0