420, 297

ITEM	DRAWING No	DESCRIPTION	QTY.	MASS (kg)
1	OEM-100-300-SO-316L	100NB - 300lb SLIP ON FLANGE 316L S/S	2	9.53
2	J003435-51	100NB SHED 40 PIPE x 90 DEGREE BEND 356R	1	98.30

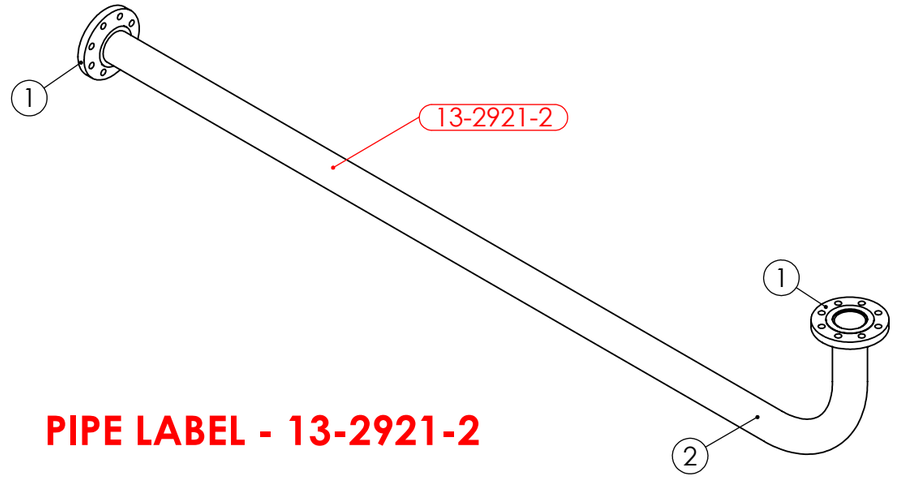

PIPE LABEL - 13-2921-2

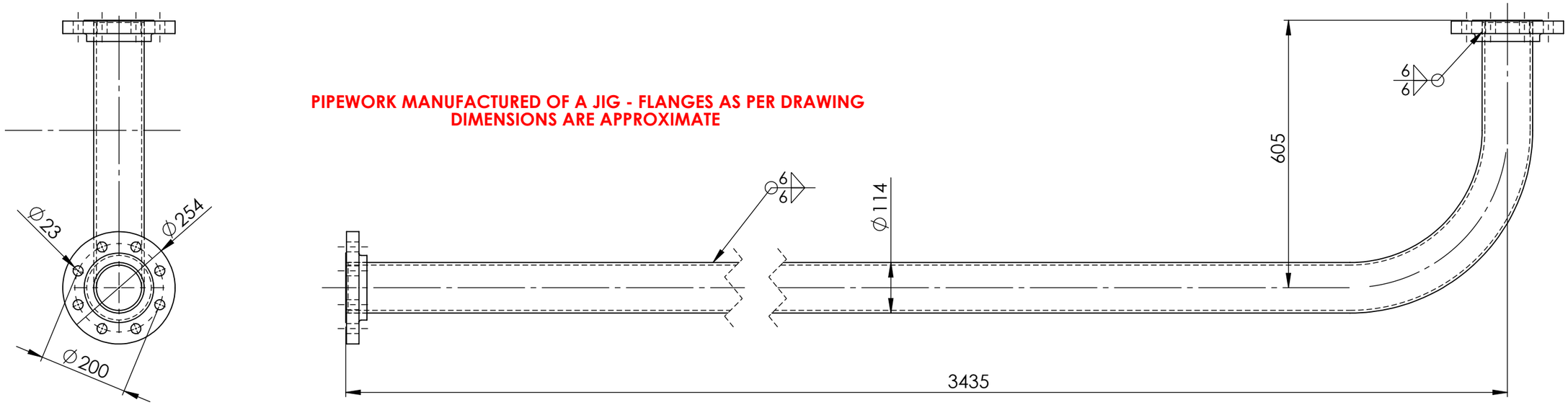

PIPEWORK MANUFACTURED OF A JIG - FLANGES AS PER DRAWING
DIMENSIONS ARE APPROXIMATE

ISSUED FOR CONSTRUCTION 17/1/26

UNIT 13 VALVE 2921 PIPE 2 WEIGHT - 82.38 kg

REV	NAME & DATE	DESCRIPTION

UNLESS OTHERWISE SPECIFIED:
TOLERANCES: MACHINE + / - 0.25mm
FABRICATION + / - 1.0 mm

THIS DRG SUPPLIED BY
RODDY ENGINEERING
14 Waratah St, TUMUT NSW 2720
Ph: 02 6947 4039

DRAWING No. 13-2921-2
REV:

DRAWN N DE BRUYN 19/09/2025
DRAWING CHECKED
DESIGNED
DESIGN CHECKED
SCALE 1:20
WORK ORDER No
APPROVED
SECTION No/KKS
A3 SHEET SIZE

snowyhydro LIMITED

M2 POWER STATION UNIT 13
VALVE 2921 DOWN STREAM PIPE # 2

SMA-DRG-NO

REV

SHEET 1 OF 1

0,0