594,420

DIMENSIONS IN MILLIMETRES

ITEM	DRAWING No	DESCRIPTION	QTY.	MASS (kg)
1	OEM-2921-SHL	100NB VALVE 2921	1	0.00
2	OEM-100-JIS30K-3	100NB JIS30K 3.0mm C-4430 GASKET	1	0
3	OEM-100-300-15	100NB 300 LB 1.5mm C-4400 GASKET	4	0
4	OEM-24x3-FW-M-304	M24 FLAT WASHER - 304 S/S MACHINED 39.5 OD	8	0.02
5	13-2921-4	UNIT 13 VALVE 2921 PIPE 4	1	73.44
6	13-2921-3	UNIT 13 VALVE 2921 PIPE 3	1	115.24
7	13-2921-2	UNIT 13 VALVE 2921 PIPE 2	1	82.38
8	13-2921-1	UNIT 13 VALVE 2921 DOWN STREAM PIPE 1	1	82.58
9	7-8_UNC-AT-120	7/8 UNC ALL THREAD Gr 8 x 120 LONG	8	0.36
10		7/8 DIA MYLAR INSULATION SLEEVE 45 LONG	8	0.00
11		7/8" FLAT WASHER HIGH TENSILE ZP	8	0.03
12		7/8" G10 EXPOY FLAT WASHER	8	0.01
13		7/8" UNC HEX NUT ZP Gr 8	8	
14		M20 FLAT WASHER 304 S/S (37x22x2)	64	
15		M20x2.5 HEX NUT 304 S/S	32	
16		M20x2.5 x 100 HEX BOLT 304 S/S	32	0.3

RED EYE QR CODE AREA

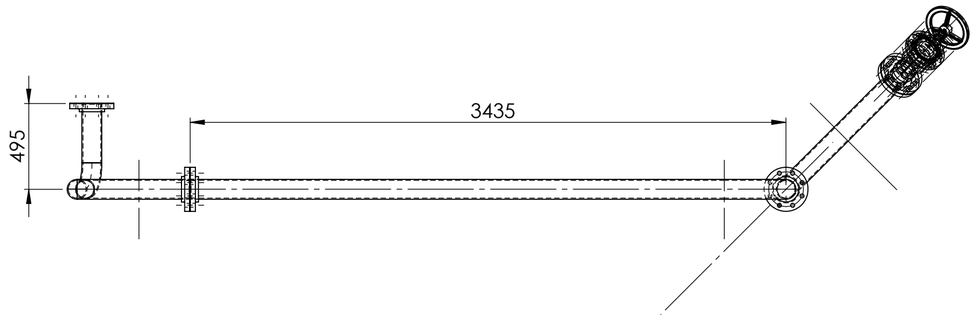

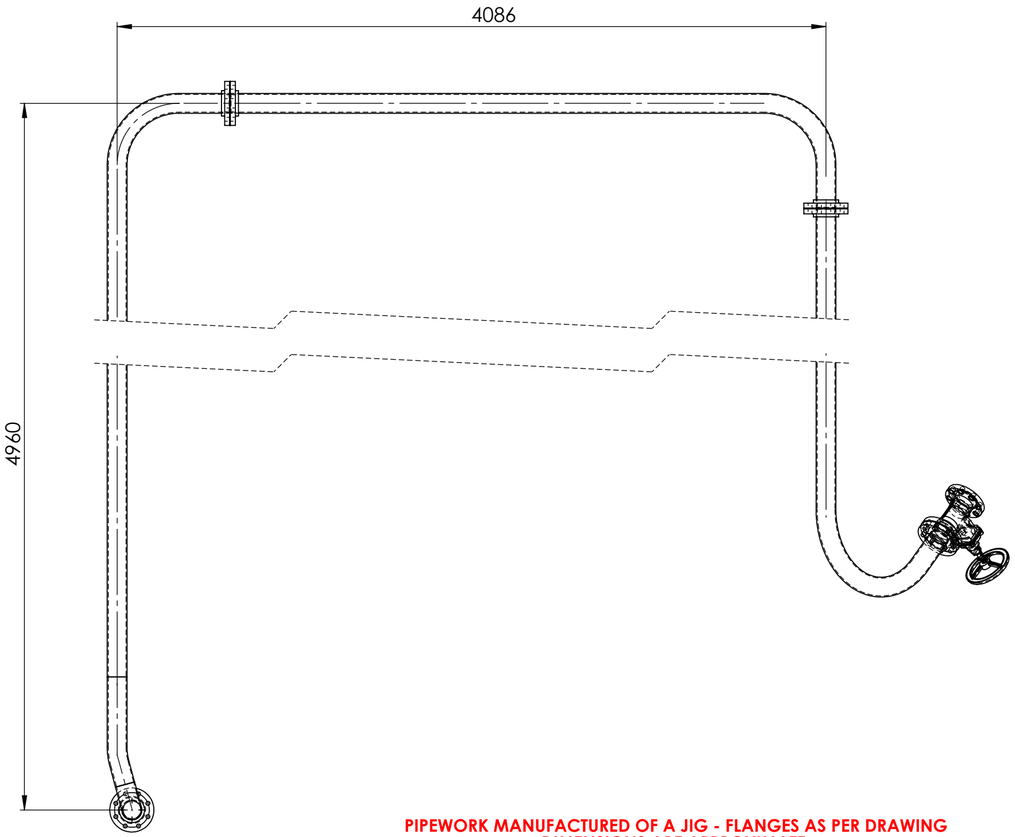

PIPEWORK MANUFACTURED OF A JIG - FLANGES AS PER DRAWING
DIMENSIONS ARE APPROXIMATE

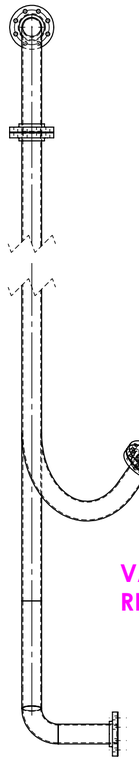

VALVE 2921

VALVE COLOURED THIS REQUIRE CHANGING

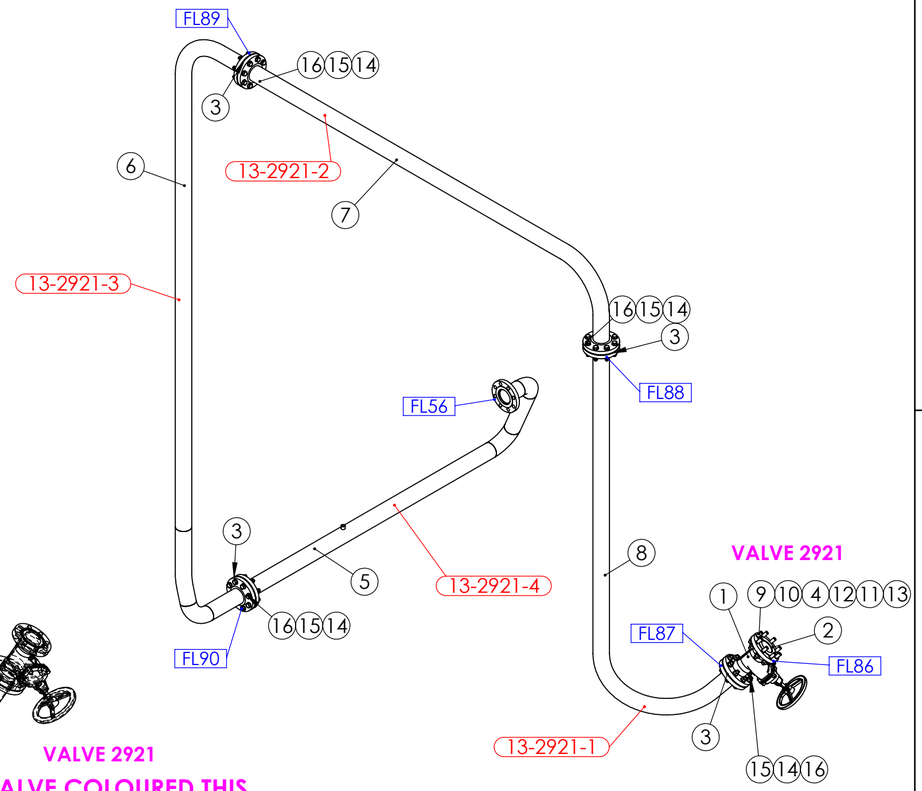

UNIT 11 VALVE 2921 PIPE ASSEMBLY WEIGHT - 280.84 kg

REV	NAME & DATE	DESCRIPTION

UNLESS OTHERWISE SPECIFIED:
TOLERANCES: MACHINE + / - 0.25mm
FABRICATION + / - 1.0 mm

THIS DRG SUPPLIED BY
RODDY ENGINEERING
14 Waratah St, TUMUT NSW 2720
Ph: 02 6947 4039

DRAWING No. 13-2921 REV:

DRAWN N DE BRUYN 17/01/2025
DRAWING CHECKED
DESIGNED
DESIGN CHECKED
SCALE 1:25
WORK ORDER No
APPROVED
SECTION No/KKS
A2 SHEET SIZE

snowyhydro LIMITED

M2 POWER STATION UNIT 13
VALVE 2921 PIPE ASSEMBLY

SMA-DRG-NO

REV

SHEET 1 OF 1

0,0