ITEM	DRAWING No	DESCRIPTION	QTY.	MASS (kg)
1	OEM-80NB-300-SO-316L	80NB - 300lb SLIP ON FLANGE 316L S/S	1	6.08
2	13-2925-1-1	80NB SHED 10 PIPE 316L SS VICTAULIC GROOVED	1	1.71

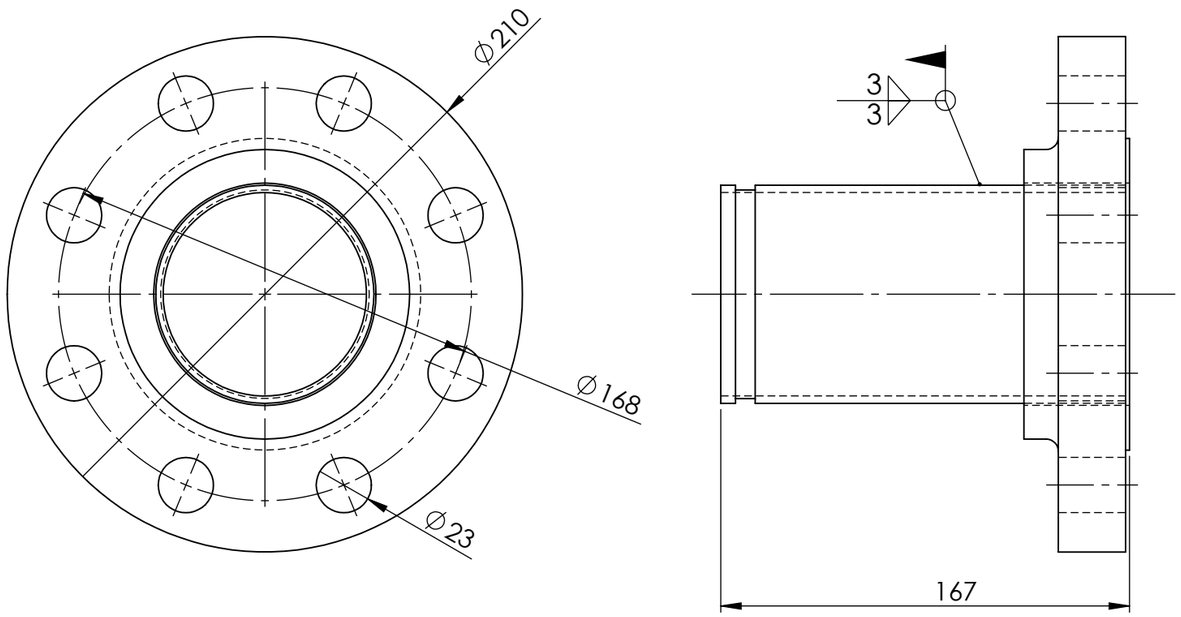

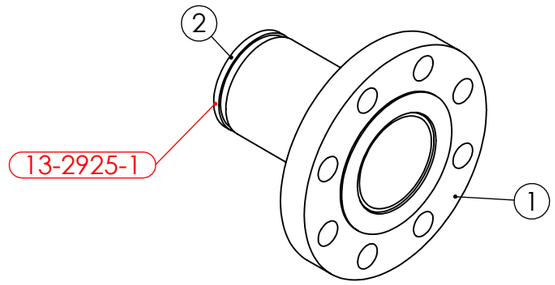

PIPE LABEL - 13-2925-1

UNIT 13 VALVE 2925-1 PIPE 1 WEIGHT - 7.12 kg

REV	NAME & DATE	DESCRIPTION

UNLESS OTHERWISE SPECIFIED:
TOLERANCES: MACHINE + / - 0.25mm
FABRICATION + / - 1.0 mm

THIS DRG SUPPLIED BY
RODDY ENGINEERING
14 Waratah St, TUMUT NSW 2720
Ph: 02 6947 4039

DRAWING No. 13-2925-1 REV:

DRAWN N DE BRUYN 17/09/2025
DRAWING CHECKED
DESIGNED
DESIGN CHECKED
SCALE 1:2.5
WORK ORDER No
APPROVED
SECTION No/KKS
A3 SHEET SIZE

snowyhydro LIMITED

M2 POWER STATION UNIT 13
VALVE 2925-1 DOWN STREAM PIPE 1

SMA-DRG-NO

REV

SHEET 3 OF 7