420, 297

ITEM	DRAWING No	DESCRIPTION	QTY.	MASS (kg)
1	13-2925-2-1	80NB SHED 10 PIPE 316 SS VICTAULIC GROOVED	1	3.66
2	13-2925-2-2	RING TO SUIT VITAULIC COUPLER	1	0.15

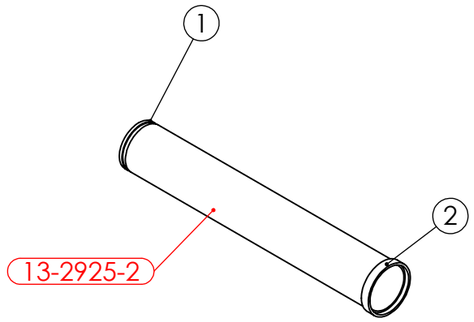

PIPE LABEL - 13-2925-2

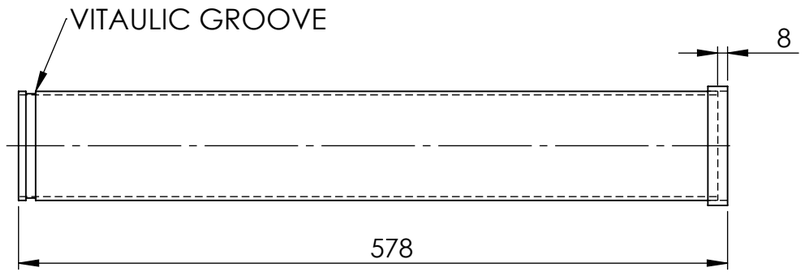

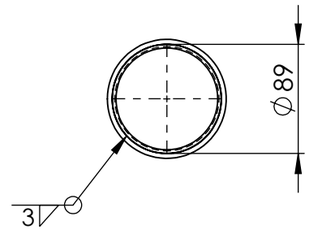

ISSUED FOR CONSTRUCTION
18/11/25

UNIT 13 VALVE 2925-2 PIPE 2 WEIGHT - 3.81 kg

REV	NAME & DATE	DESCRIPTION

UNLESS OTHERWISE SPECIFIED:
TOLERANCES: MACHINE + / - 0.25mm
FABRICATION + / - 1.0 mm

THIS DRG SUPPLIED BY
RODDY ENGINEERING
14 Waratah St, TUMUT NSW 2720
Ph: 02 6947 4039

DRAWING No. 13-2925-2 REV:

DRAWN N DE BRUYN 17/09/2025
DRAWING CHECKED
DESIGNED
DESIGN CHECKED
SCALE 1:5
WORK ORDER No
APPROVED
SECTION No/KKS
A3 SHEET SIZE

snowyhydro LIMITED

M2 POWER STATION UNIT 13
VALVE 2925-2 DOWN STREAM PIPE 2

SMA-DRG-NO

REV

SHEET 4 OF 7

0,0