ITEM	DRAWING No	DESCRIPTION	QTY.	MASS (kg)
1	OEM-80NB-VC	80NB VACULTIC COUPLING 316 S/S	1	5.48
2	13-2925-2	UNIT 13 VALVE 2925-2 PIPE 2	1	3.81
3	13-2925-1	UNIT 13 VALVE 2925-1 PIPE 1	1	7.12

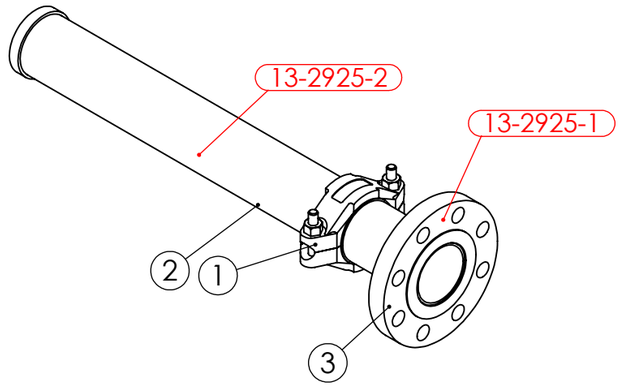

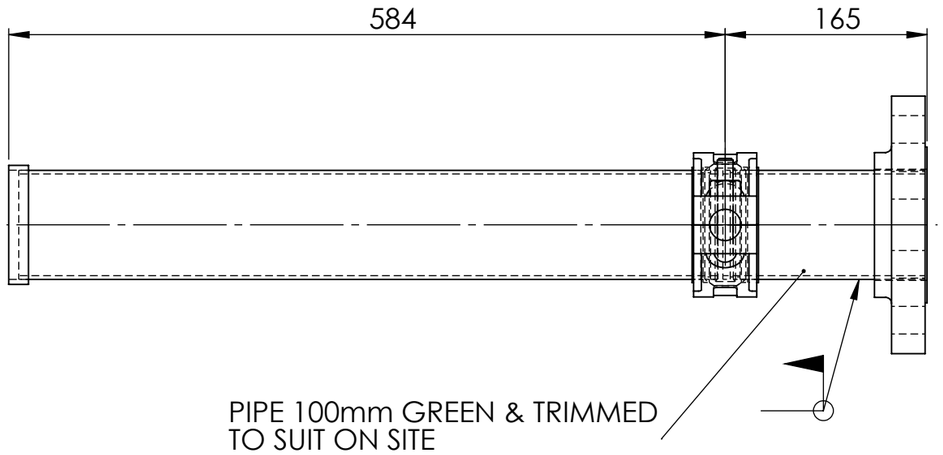

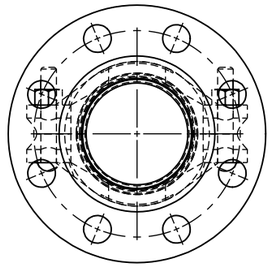

ISSUED FOR CONSTRUCTION
18/11/25

UNIT 13 VALVE 2925 DOWN STREAM PIPE ASSEMBLY WEIGHT - 13.41 kg

REV	NAME & DATE	DESCRIPTION

UNLESS OTHERWISE SPECIFIED:
TOLERANCES: MACHINE + / - 0.25mm
FABRICATION + / - 1.0 mm

THIS DRG SUPPLIED BY
RODDY ENGINEERING
14 Waratah St, TUMUT NSW 2720
Ph: 02 6947 4039

DRAWING No. 13-2925
REV:

DRAWN N DE BRUYN 8/08/2025
DRAWING CHECKED
DESIGNED
DESIGN CHECKED
SCALE 1:5
APPROVED
WORK ORDER No
SECTION No/KKS
A3 SHEET SIZE

snowyhydro LIMITED

M2 POWER STATION UNIT 13
VALVE 2925 DOWN STREAM PIPE ASSEMBLY

SMA-DRG-NO

REV

SHEET 2 OF 7