DIMENSIONS IN MILLIMETRES

ITEM	DRAWING No	DESCRIPTION	QTY.	MASS (kg)
1	OEM-80NB-JIS30K-P-316L	80NB PLATE FLANGE JIS 30 K 316L S/S	1	5.32
2	OEM-80NB-300-SO-316L	80NB - 300lb SLIP ON FLANGE 316L S/S	1	6.08
3	J003435-68	80NB SHED 40 PIPE VALVE 2931A PIPE 5	1	39.49

RED EYE QR CODE AREA

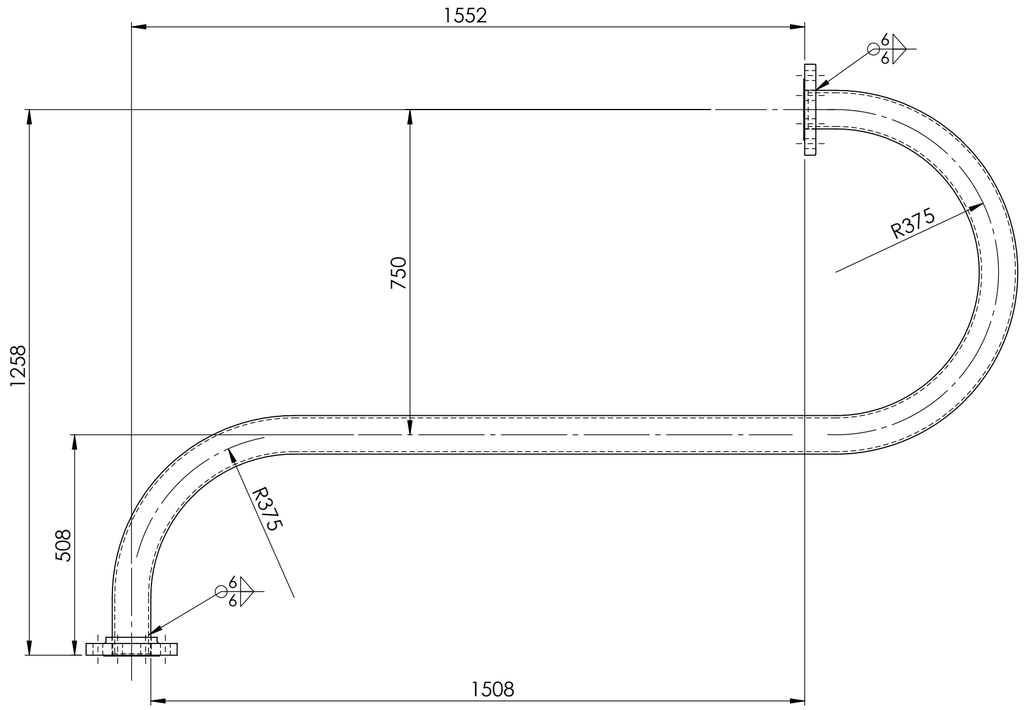

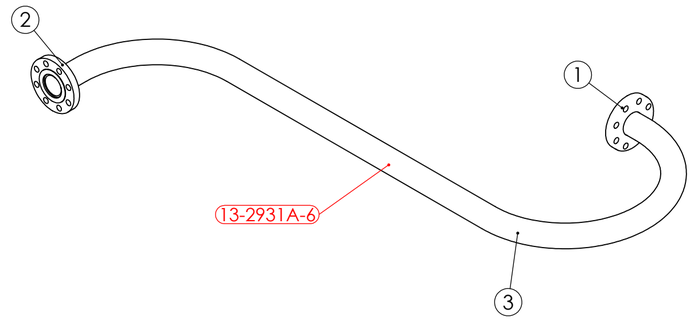

PIPE LABEL - 13-2931A-6

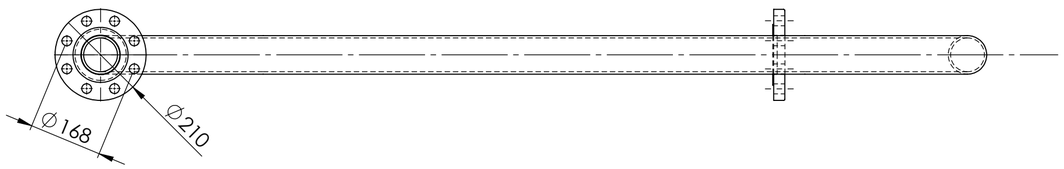

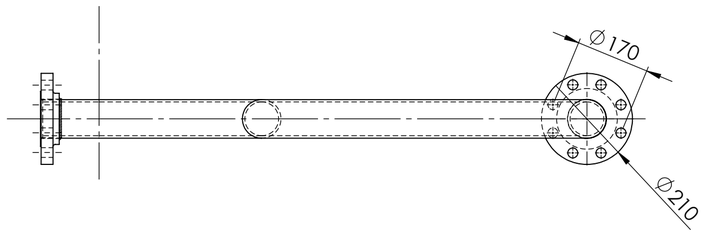

ISSUED FOR CONSTRUCTION 17/11/25

PIPEWORK MANUFACTURED OF A JIG - FLANGES AS PER DRAWING
DIMENSIONS ARE APPROXIMATE

UNIT 13 VALVE 2931A PIPE 6 WEIGHT - 48.41 kg

REV	NAME & DATE	DESCRIPTION

UNLESS OTHERWISE SPECIFIED:
TOLERANCES: MACHINE + / - 0.25mm
FABRICATION + / - 1.0 mm

THIS DRG SUPPLIED BY
RODDY ENGINEERING
14 Waratah St, TUMUT NSW 2720
Ph: 02 6947 4039

DRAWN: N DE BRUYN 19/09/2025
DRAWING CHECKED
DESIGNED
DESIGN CHECKED
SCALE 1:10
APPROVED
WORK ORDER No
SECTION No/KKS
A2 SHEET SIZE

snowyhydro LIMITED

M2 POWER STATION UNIT 13
VALVE 2931A DOWNSTREAM PIPE 6

DRAWING No. 13-2931A-6 REV:

SMA-DRG-NO

REV

SHEET 1 OF 1