594,420

DIMENSIONS IN MILLIMETRES

ITEM	DRAWING No	DESCRIPTION	QTY.	MASS (kg)
1	OEM-80NB-JIS30K-P-316L	80NB PLATE FLANGE JIS 30 K 316L S/S	1	5.32
2	OEM-80NB-300-SO-316L	80NB - 300lb SLIP ON FLANGE 316L S/S	1	6.08
3	J003435-57	80NB SHED 40 VALVE 2931B PIPE #4	1	29.07

RED EYE QR CODE AREA

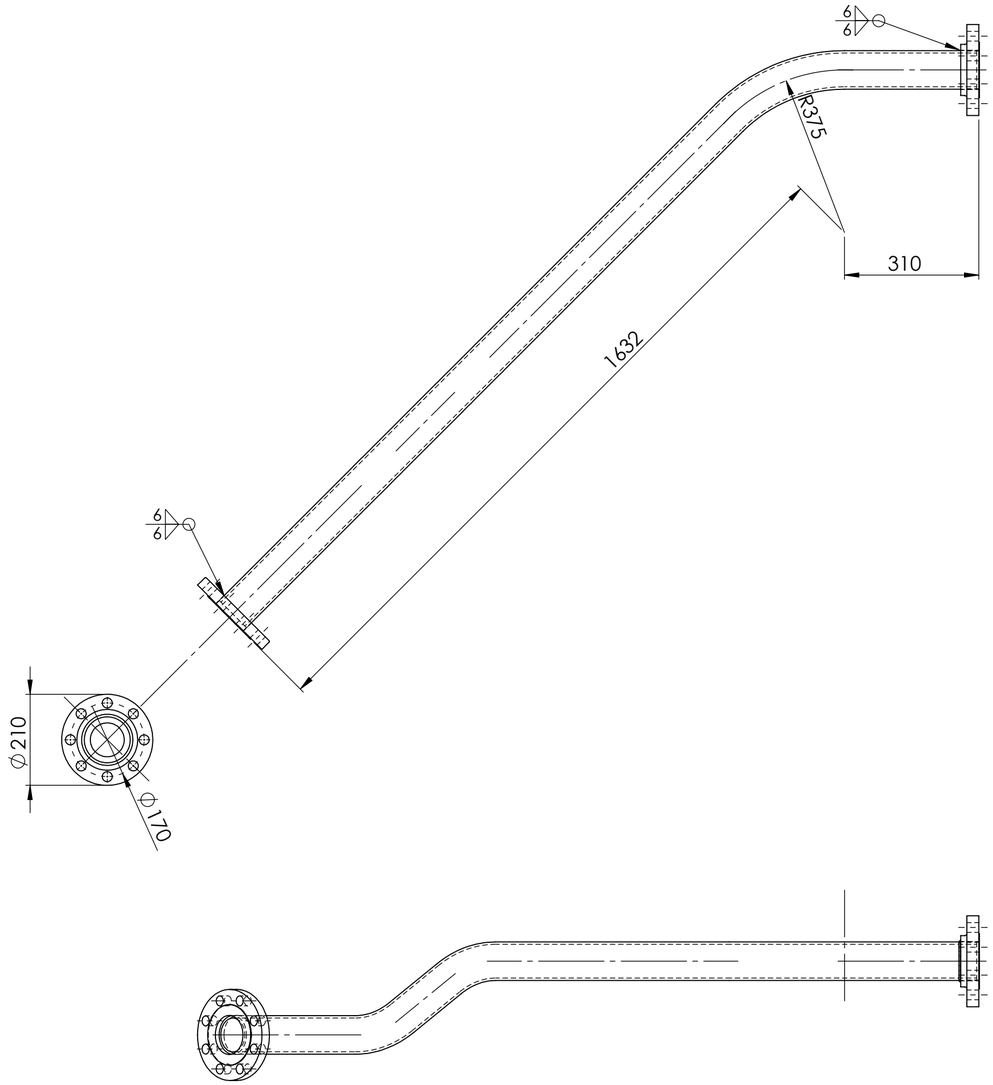

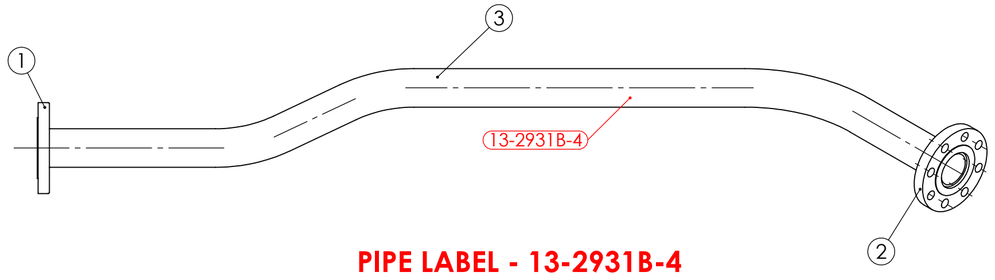

PIPE LABEL - 13-2931B-4

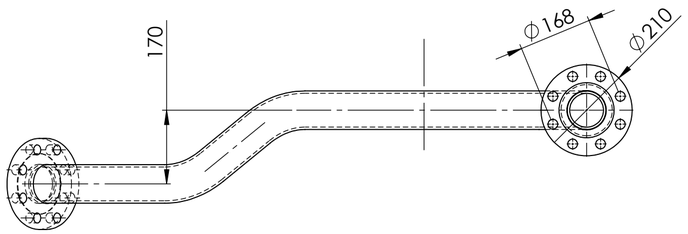

ISSUED FOR CONSTRUCTION 17/11/25

PIPEWORK MANUFACTURED OF A JIG - FLANGES AS PER DRAWING
DIMENSIONS ARE APPROXIMATE

UNIT 13 VALVE 2931B PIPE 4 WEIGHT - 37.42 kg

REV	NAME & DATE	DESCRIPTION

UNLESS OTHERWISE SPECIFIED:
TOLERANCES: MACHINE + / - 0.25mm
FABRICATION + / - 1.0 mm

THIS DRG SUPPLIED BY
RODDY ENGINEERING
14 Waratah St, TUMUT NSW 2720
Ph: 02 6947 4039

DRAWING No. 13-2931B-4 REV:

DRAWN N DE BRUYN 19/09/2025
DRAWING CHECKED
DESIGNED
DESIGN CHECKED
SCALE 1:10
WORK ORDER No
APPROVED
SECTION No/KKS
A2 SHEET SIZE

snowyhydro LIMITED

M2 POWER STATION UNIT 13
VALVE 2931B DOWN STREAM PIPE 4

SMA-DRG-NO

REV

SHEET 1 OF 1

0,0