DIMENSIONS IN MILLIMETRES

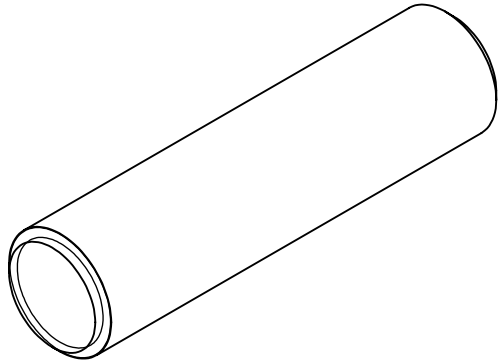

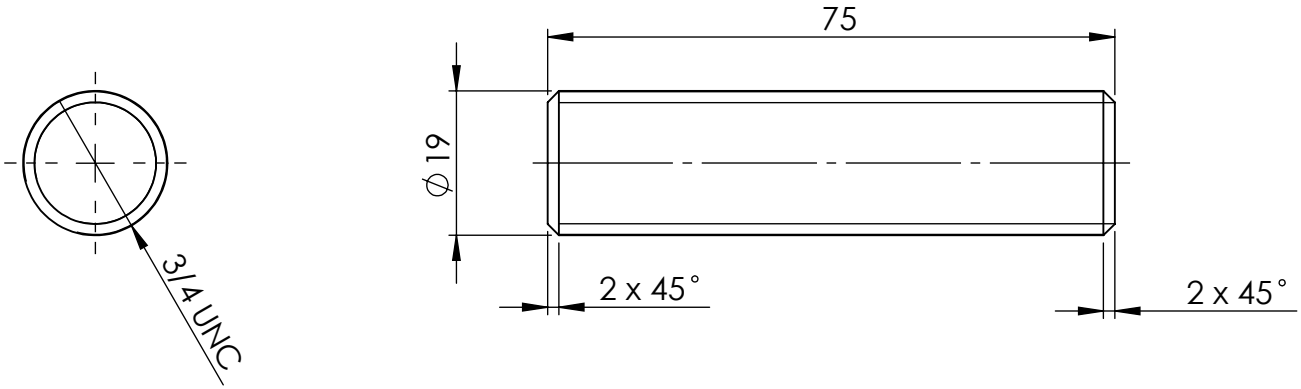

MATERIAL:- MILD STEEL - Grade 8 BLACK

UNLESS OTHERWISE SPECIFIED: TOLERANCES: MACHINE + / - 0.25mm FABRICATION + / - 1.0 mm

THIS DRAWING IS THE PROPERTY OF MECHANICAL ENGINEERING & CAD SERVICES (MECS) Pty Ltd & MUST NOT BE MANUFACTURED FROM,COPIED OR TRANSMITTED TO A THIRD PARTY WITHOUT THE PRIOR APPROVAL FROM MECHANICAL ENGINEERING & CAD SERVICES (MECS) Pty Ltd

THIRD ANGLE PROJECTION

WEIGHT: 0 Kg

MECS
Mechanical Engineering & CAD Services
11 Campbell Place WAGGA NSW 2650
Ph: - 0409 985 816
Email: nick@mecservices.com.au

TITLE: 3/4" UNC ALL THREAD GRADE 8-75 LONG

DWG NO. 3-4_UNC-AT-75 REV A4

DRAWN N DE BRUYN DATE 7/12/2024 SCALE:1:1 SHEET 1 OF 1