DIMENSIONS IN MILLIMETRES

ITEM NO.	MATERIAL	MASS (kg)
1	MS PLATE GRADE 250	1

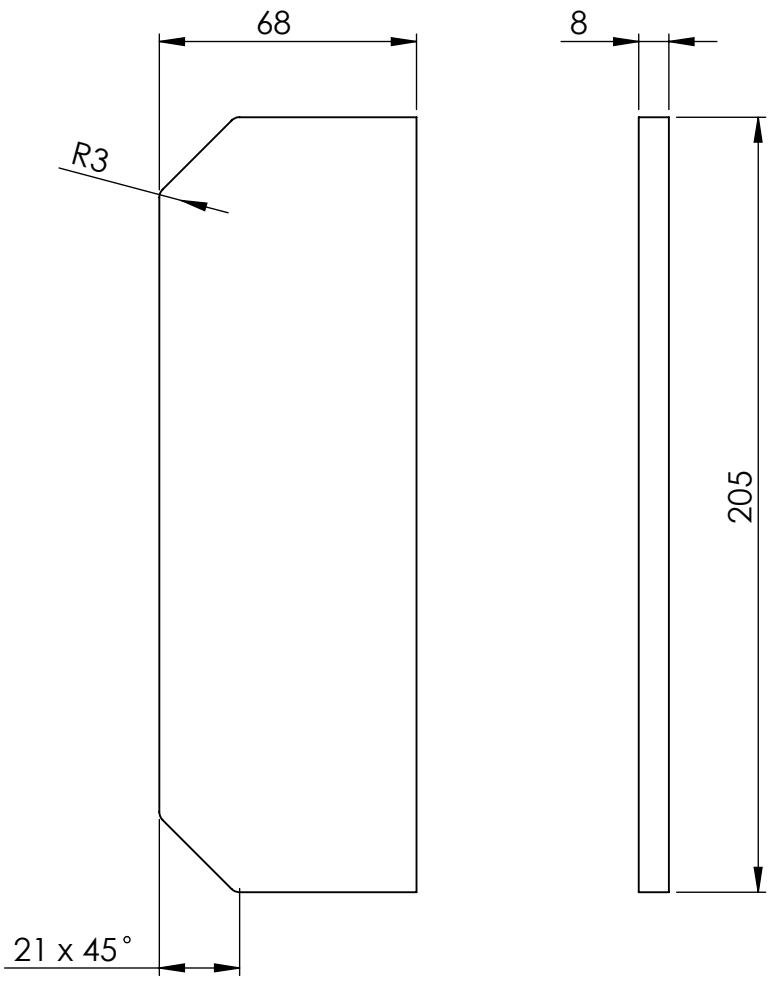

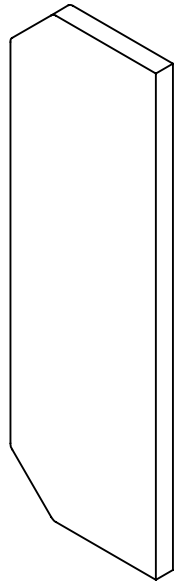

MS PLATE GRADE 250

UNLESS OTHERWISE SPECIFIED: TOLERANCES: MACHINE + / - 0.25mm FABRICATION + / - 1.0 mm

THIS DRAWING IS THE PROPERTY OF MECHANICAL ENGINEERING & CAD SERVICES (MECS) Pty Ltd & MUST NOT BE MANUFACTURED FROM,COPIED OR TRANSMITTED TO A THIRD PARTY WITHOUT THE PRIOR APPROVAL FROM MECHANICAL ENGINEERING & CAD SERVICES (MECS) Pty Ltd

THIRD ANGLE PROJECTION

WEIGHT: 1 Kg

MECS
Mechanical Engineering & CAD Services
11 Campbell Place WAGGA NSW 2650
Ph: - 0409 985 816
Email: nick@mecservices.com.au

TITLE:

8 THK 230 PFC WEB GUSSET

DWG NO. 30-12 | A4

DRAWN N DE BRUYN | DATE 6/7/2022 | SCALE:1:2 | SHEET 1 OF 2

PART No.: 50-12
DESCRIPTION: 12 - 250 PFC WEB GUSSET
MATERIAL: AS PLATE GRADE 250
THICKNESS.: 8
QTY.: REFER TO PURCHASE ORDER