ITEM	DRAWING No	DESCRIPTION	QTY.	MASS (kg)
1	OEM-50x55-LR-40-316L	50NB LONG RADIUS BEND SHED 40 TRIMMED TO 55 DEGRESS 316L S/S	1	0.40
2	OEM-50-150-SO-316L	50NB ANSI 150 Lb SLIP ON FLANGE 316L S/S	1	2.16
3	OEM-40-H-SO-M-316L	40NB TABLE H FLANGE SLIP ON BORE M/C TO 62	1	2
4	3435-50-011-03	PIPE LABEL W-011	1	0.01
5	3435-50-011-02	50NB SHED 40 PIPE 316L S/S	1	3.93

RED EYE QR CODE AREA

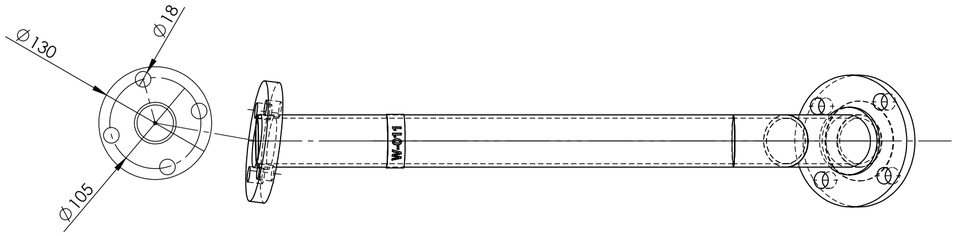

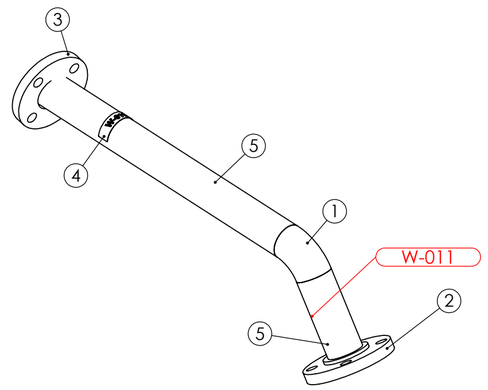

PIPE LABEL - W-011

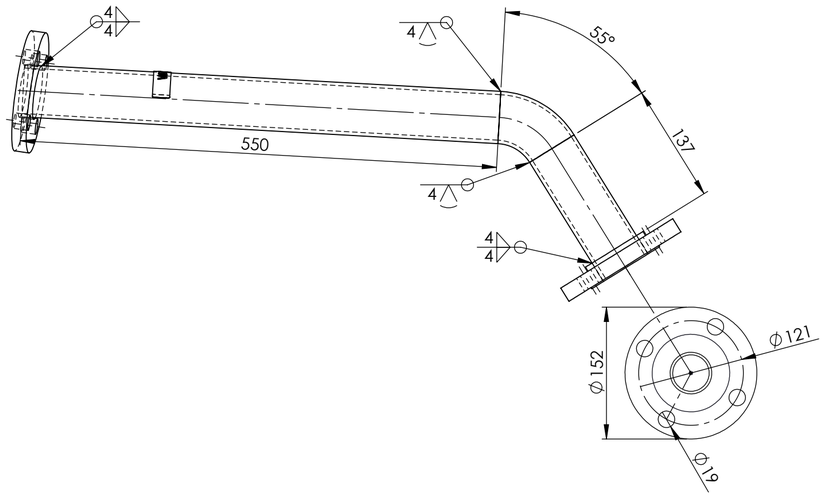

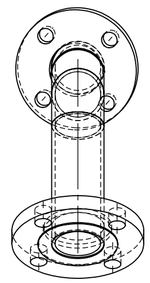

PIPEWORK MANUFACTURED OF A JIG - FLANGES AS PER DRAWING
DIMENSIONS ARE APPROXIMATE

AS INSTALLED 6/3/25

PIPE W-011 ASSEMBLY WEIGHT - 8.04 kg

REV	NAME & DATE	DESCRIPTION

UNLESS OTHERWISE SPECIFIED:
TOLERANCES: MACHINE + / - 0.25mm
FABRICATION + / - 1.0 mm

THIS DRG SUPPLIED BY
RODDY ENGINEERING
14 Waratah St, TUMUT NSW 2720
Ph: 02 6947 4039

DRAWING No. 3435-50-011
REV:

DRAWN N DE BRUYN 12/10/2024
DRAWING CHECKED
DESIGNED
DESIGN CHECKED
SCALE 1:5
WORK ORDER No
APPROVED
SECTION No/KKS
A2 SHEET SIZE

snowyhydro LIMITED

M2 POWER STATION
TURBINE COOLING WATER UNIT 11
PIPE ASSEMBLY W011

SMA-DRG-NO

REV

SHEET 1 OF 1