ITEM NO.	DESCRIPTION	LENGTH	QTY	MATERIAL	MASS (kg)
1	48x3 CHS	42	1	316L STAINLESS STEEL	0.13
2	48x3 CHS	80	1	316L STAINLESS STEEL	0.25

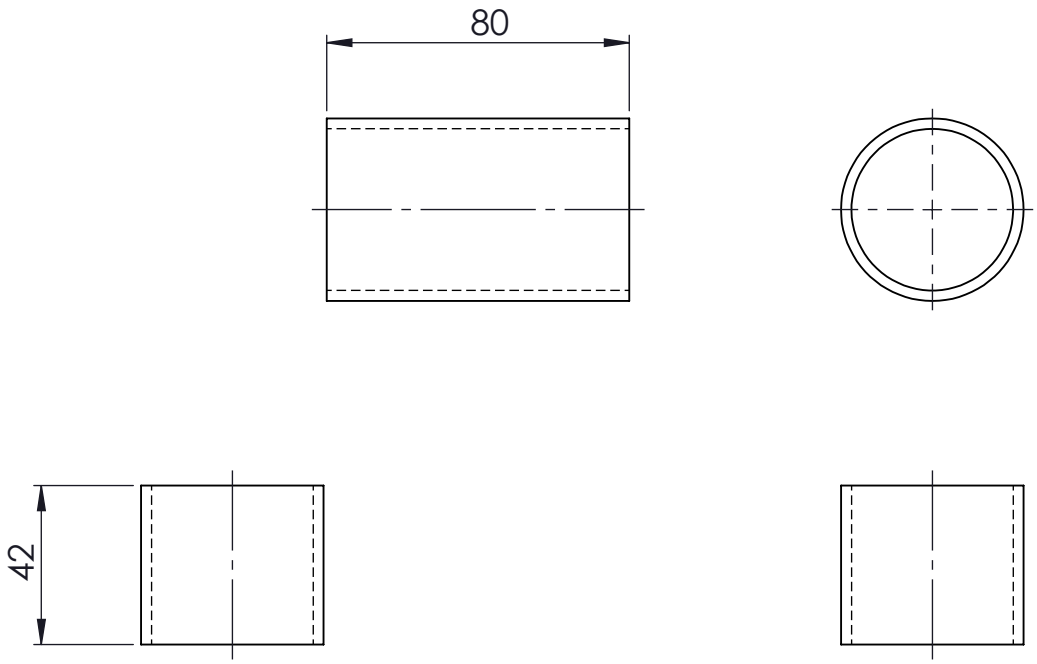

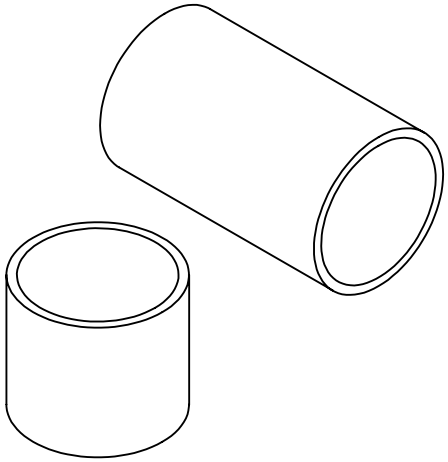

MATERIAL:- 316L STAINLESS STEEL

40NB SHED 40 PIPE 316L S/S WEIGHT - 0.39 kg

UNLESS OTHERWISE SPECIFIED: TOLERANCES: MACHINE + / - 0.25mm FABRICATION + / - 1.0 mm

DIMENSIONS IN MILLIMETRES

THIS DRAWING IS THE PROPERTY OF MECHANICAL ENGINEERING & CAD SERVICES (MECS) Pty Ltd & MUST NOT BE MANUFACTURED FROM,COPIED OR TRANSMITTED TO A THIRD PARTY WITHOUT THE PRIOR APPROVAL FROM MECHANICAL ENGINEERING & CAD SERVICES (MECS) Pty Ltd

MECS
Mechanical Engineering & CAD Services
11 Campbell Place WAGGA NSW 2650
Ph: - 0409 985 816
Email: nick@mecservices.com.au

THIRD ANGLE PROJECTION

WEIGHT: 0.39 kg

CLIENT

RODDY ENGINEERING
14 Waratah St TUMUT NSW 2720
Ph: - 02 6947 4039
Email: roddyeng.com.au

TITLE: 40NB SHED 40 PIPE 316L S/S

DWG NO.	REV	
3435-50-012-02		A4

DRAWN	DATE	SCALE	SHEET
N DE BRUYN	1/05/2024	1:2	1 OF 1