REVISIONS			
REV.	DESCRIPTION	DATE	APPROVED
A	FLANGES WERE 40NB-PN6	10/02/2025	NDB

ITEM	DRAWING No	DESCRIPTION	QTY.	MASS (kg)
1	OEM-40-150-SO-316L	40NB FLANGE ANSI 150 LB SLIP ON 316L S/S	2	1.3
2	3435-50-014-03	PIPE LABEL W-014	1	0.01
3	3435-50-013-04	40NB SHED 40 316L S/S 135 BEND	2	2.14
4	3435-50-013-03	40NB SHED 40 316 S/S PIPE 1250 R	1	4.05
5	3435-50-013-02	40NB SHED 40 316 S/S PIPE 1410 R	1	4.57

RED EYE QR CODE AREA

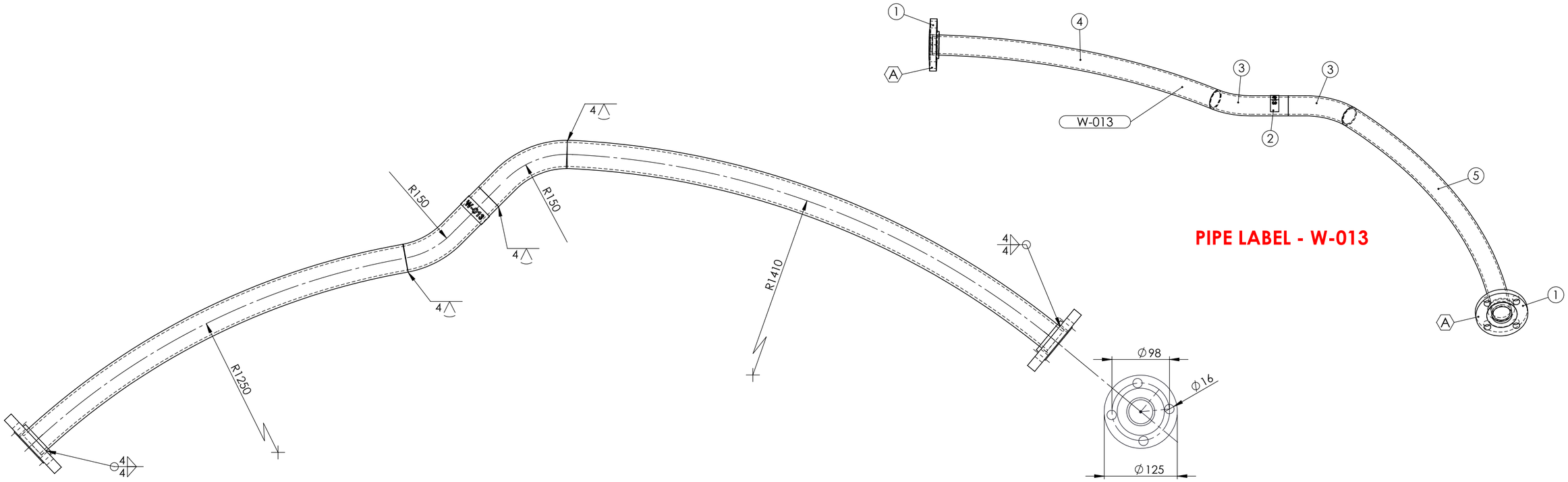

PIPE LABEL - W-013

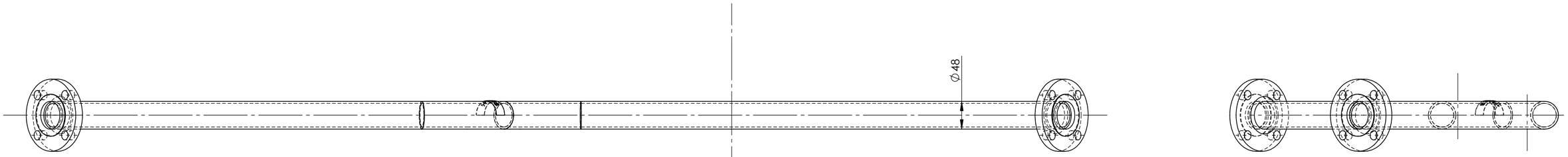

PIPEWORK MANUFACTURED OF A JIG - FLANGES AS PER DRAWING
DIMENSIONS ARE APPROXIMATE

AS INSTALLED 14/3/25

PIPE W-013 ASSEMBLY WEIGHT - 10.80 kg

REV	NAME & DATE	DESCRIPTION

UNLESS OTHERWISE SPECIFIED:
TOLERANCES: MACHINE + / - 0.25mm
FABRICATION + / - 1.0 mm

THIS DRG SUPPLIED BY
RODDY ENGINEERING
14 Waratah St, TUMUT NSW 2720
Ph: 02 6947 4039

DRAWING No. 3435-50-013
REV: A

DRAWN: N DE BRUYN 11/10/2024
DRAWING CHECKED
DESIGNED
DESIGN CHECKED
SCALE 1:5
WORK ORDER No
APPROVED
SECTION No/KKS
A2 SHEET SIZE

snowyhydro LIMITED

M2 POWER STATION
UNIT 11 TURBINE COOLING WATER
PIPE W-013 ASSEMBLY

SMA-DRG-NO
A REV
SHEET 1 OF 1