ITEM	DRAWING No	DESCRIPTION	QTY.	MASS (kg)
1	OEM-40-H-SO-M-316L	40NB TABLE H FLANGE SLIP ON BORE M/C TO 62	1	2
2	OEM-50-150-SO-316L	50NB ANSI 150 Lb SLIP ON FLANGE 316L S/S	1	2.16
3	3435-50-015-02	50NB SHED 40 316L S/S 142 BEND	1	6.06
4	OEM-50-LRx30-40-316L	50NB LONG RADIUS BEND SHED 40 TRIMMED TO 30 DEGRESS 316L S/S	2	0.22
5	OEM-50-LRx45-40-316L	50NB LONG RADIUS BEND SHED 40 TRIMMED TO 45 DEGRESS 316L S/S	1	0.33

RED EYE QR CODE AREA

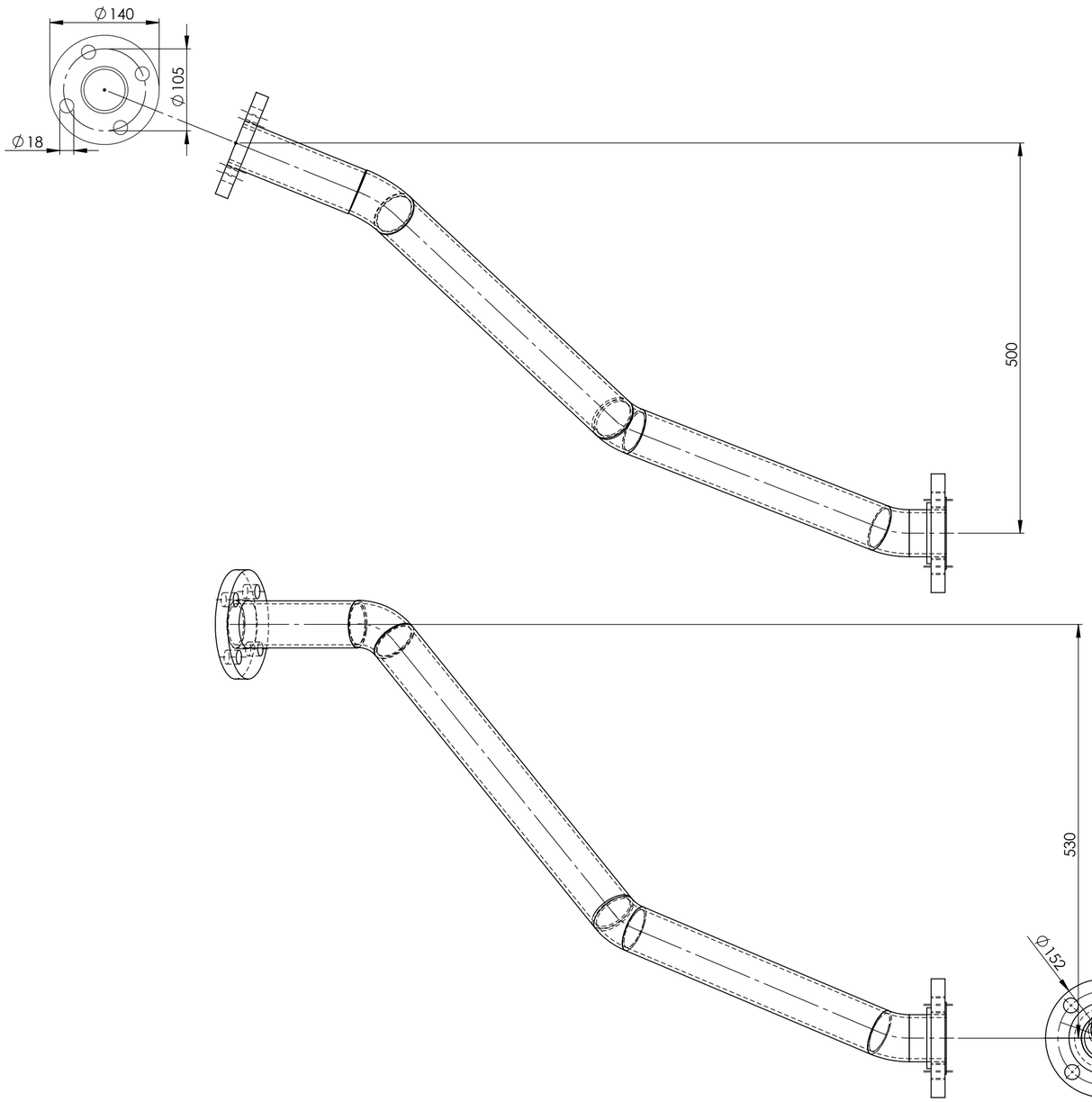

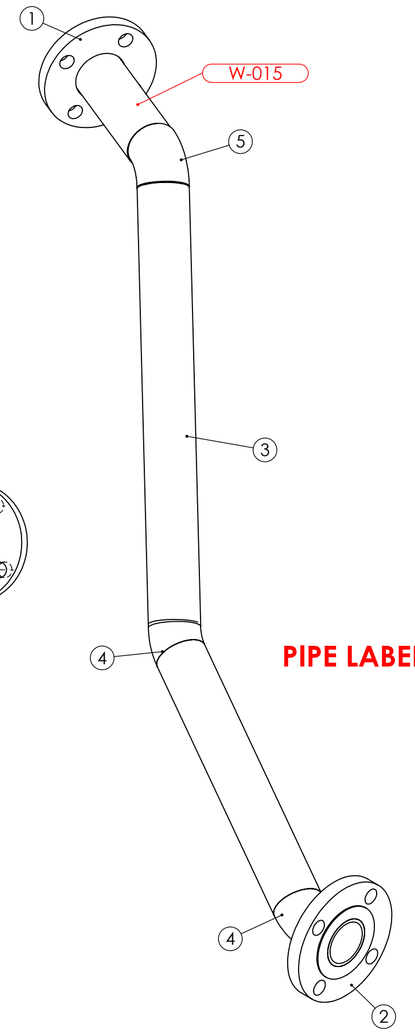

PIPE LABEL - W-015

AS INSTALLED 14/3/25

PIPEWORK TO BE MANUFACTURED ON SITE - FLANGES AS PER DRAWING
DIMENSIONS ARE APPROXIMATE

PIPE W-015 ASSEMBLY WEIGHT - 10.54 kg

REV	NAME & DATE	DESCRIPTION

UNLESS OTHERWISE SPECIFIED:
TOLERANCES: MACHINE + / - 0.25mm
FABRICATION + / - 1.0 mm

THIS DRG SUPPLIED BY
RODDY ENGINEERING
14 Waratah St, TUMUT NSW 2720
Ph: 02 6947 4039

DRAWING No. 3435-50-015
REV:

DRAWN N DE BRUYN 4/11/2024
DRAWING CHECKED
DESIGNED
DESIGN CHECKED
SCALE 1:5
WORK ORDER No
APPROVED
SECTION No/KKS
A2 SHEET SIZE

snowyhydro LIMITED

M2 POWER STATION
UNIT 11 TURBINE COOLING WATER
PIPE W-015 ASSEMBLY

SMA-DRG-NO

REV

SHEET 1 OF 1

0,0