ITEM NO.	DESCRIPTION	LENGTH	QTY	MATERIAL	MASS (kg)
1	60.3x3.9 CHS	16.1	1	316L STAINLESS STEEL	0.09
2	60.3x3.9 CHS	26.5	2	316L STAINLESS STEEL	0.15

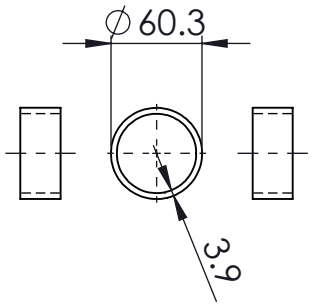

MATERIAL:- 316L STAINLESS STEEL

40NB SHED 40 316L S/S WEIGHT - 0.38 kg

UNLESS OTHERWISE SPECIFIED: TOLERANCES: MACHINE + / - 0.25mm FABRICATION + / - 1.0 mm

DIMENSIONS IN MILLIMETRES

THIS DRAWING IS THE PROPERTY OF MECHANICAL ENGINEERING & CAD SERVICES (MECS) Pty Ltd & MUST NOT BE MANUFACTURED FROM,COPIED OR TRANSMITTED TO A THIRD PARTY WITHOUT THE PRIOR APPROVAL FROM MECHANICAL ENGINEERING & CAD SERVICES (MECS) Pty Ltd

MECS
Mechanical Engineering & CAD Services
11 Campbell Place WAGGA NSW 2650
Ph: - 0409 985 816
Email: nick@mecservices.com.au

THIRD ANGLE PROJECTION

WEIGHT: 0.38 kg

CLIENT

RODDY ENGINEERING
14 Waratah St TUMUT NSW 2720
Ph: - 02 6947 4039
Email: roddyeng.com.au

TITLE: 40NB SHED 40 316L S/S

DWG NO.	REV	
3435-50-016-05		A4

DRAWN N DE BRUYN DATE 30/04/2024 SCALE:1:5 SHEET 1 OF 1