REVISIONS			
REV.	DESCRIPTION	DATE	APPROVED
A	WAS 40NB PLATE FLANGE JIS10 316L S/S	5/02/2025	NDB

ITEM	DRAWING No	DESCRIPTION	QTY.	MASS (kg)
1	OEM-50-150-M-316L	50NB ANSI 150 Lb BLIND FLANGE BORED 61 DIA 316L S/S	1	2.4
2	OEM-40-H-SO-316L	40NB FLANGE TABLE H SLIP ON 316L S/S	1	2
3	OEM-40-LR-40-316L	40NB LONG RADIUS BEND 316L S/S SHED 40	1	0.37
4	3435-50-017-03	PIPE LABEL W-017	1	0.01
5	3435-50-017-02	40NB SHED 40 316 S/S PIPE	1	0.57
6	3435-50-017-01	40NB SHED 40 316L S/S 715 R	1	2.41

RED EYE QR CODE AREA

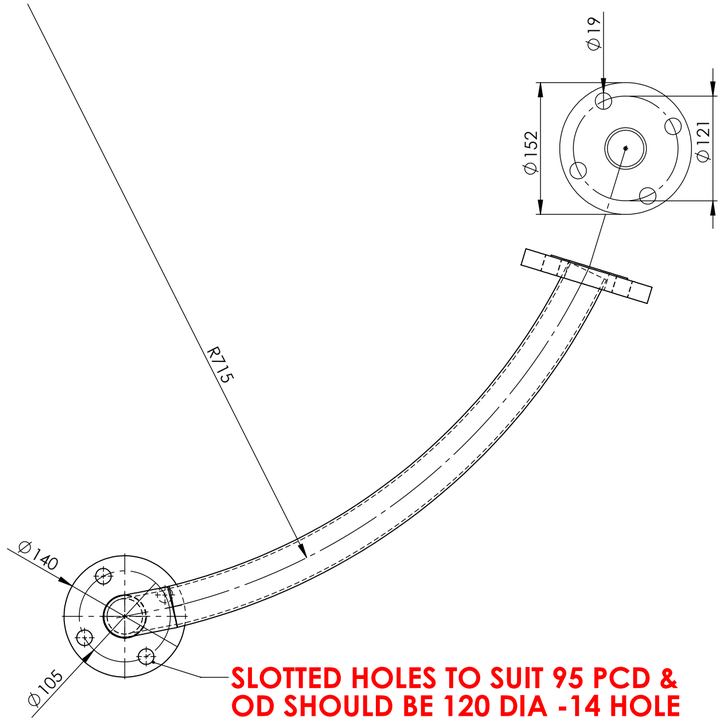

SLOTTED HOLES TO SUIT 95 PCD & OD SHOULD BE 120 DIA -14 HOLE

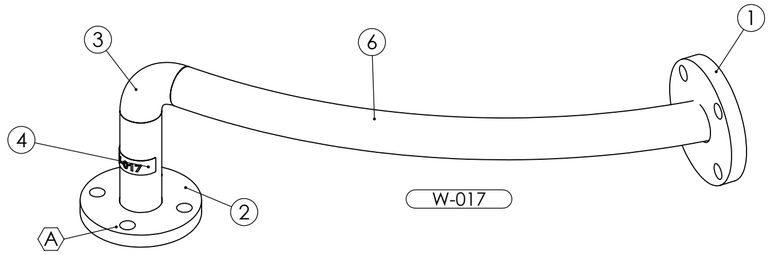

PIPE LABEL - W-017

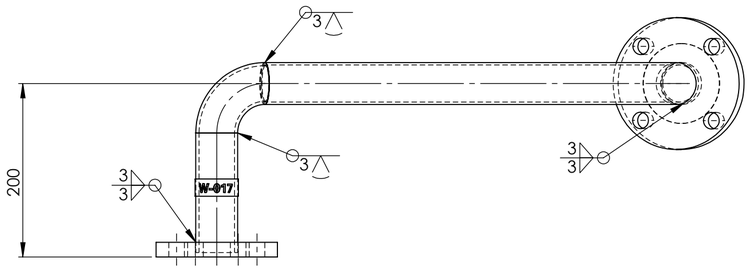

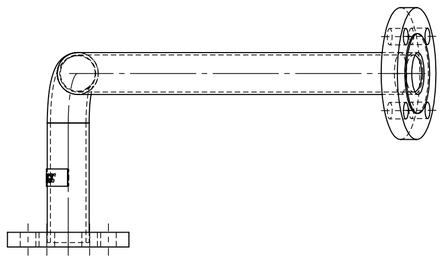

AS INSTALLED 14/3/25

ALL WELDS - 3 CFW UNLESS NOTED OTHERWISE

PIPEWORK MANUFACTURED OF A JIG - FLANGES AS PER DRAWING DIMENSIONS ARE APPROXIMATE

PIPE W-017 ASSEMBLY WEIGHT -7.09 kg

REV	NAME & DATE	DESCRIPTION

UNLESS OTHERWISE SPECIFIED:
TOLERANCES: MACHINE + / - 0.25mm
FABRICATION + / - 1.0 mm

THIS DRG SUPPLIED BY
RODDY ENGINEERING
14 Waratah St, TUMUT NSW 2720
Ph: 02 6947 4039

DRAWING No. 3435-50-017
REV: A

DRAWN: N DE BRUYN 27/09/2024
DRAWING CHECKED
DESIGNED
DESIGN CHECKED
SCALE 1:5
APPROVED
WORK ORDER No
SECTION No/KKS
A2 SHEET SIZE

snowy LIMITED

M2 POWER STATION
UNIT 11 TURBINE COOLING WATER
PIPE W-017 ASSEMBLY

SMA-DRG-NO
A REV
SHEET 1 OF 1