ITEM NO.	DESCRIPTION	LENGTH	MATERIAL	MASS (kg)
1	60x3.9 CHS	157	316L STAINLESS STEEL	1
2	60x3.9 CHS	411	316L STAINLESS STEEL	2
3	60x3.9 CHS	127	316L STAINLESS STEEL	1
4	60x3.9 CHS	61	316L STAINLESS STEEL	0
5	60x3.9 CHS	26	316L STAINLESS STEEL	0

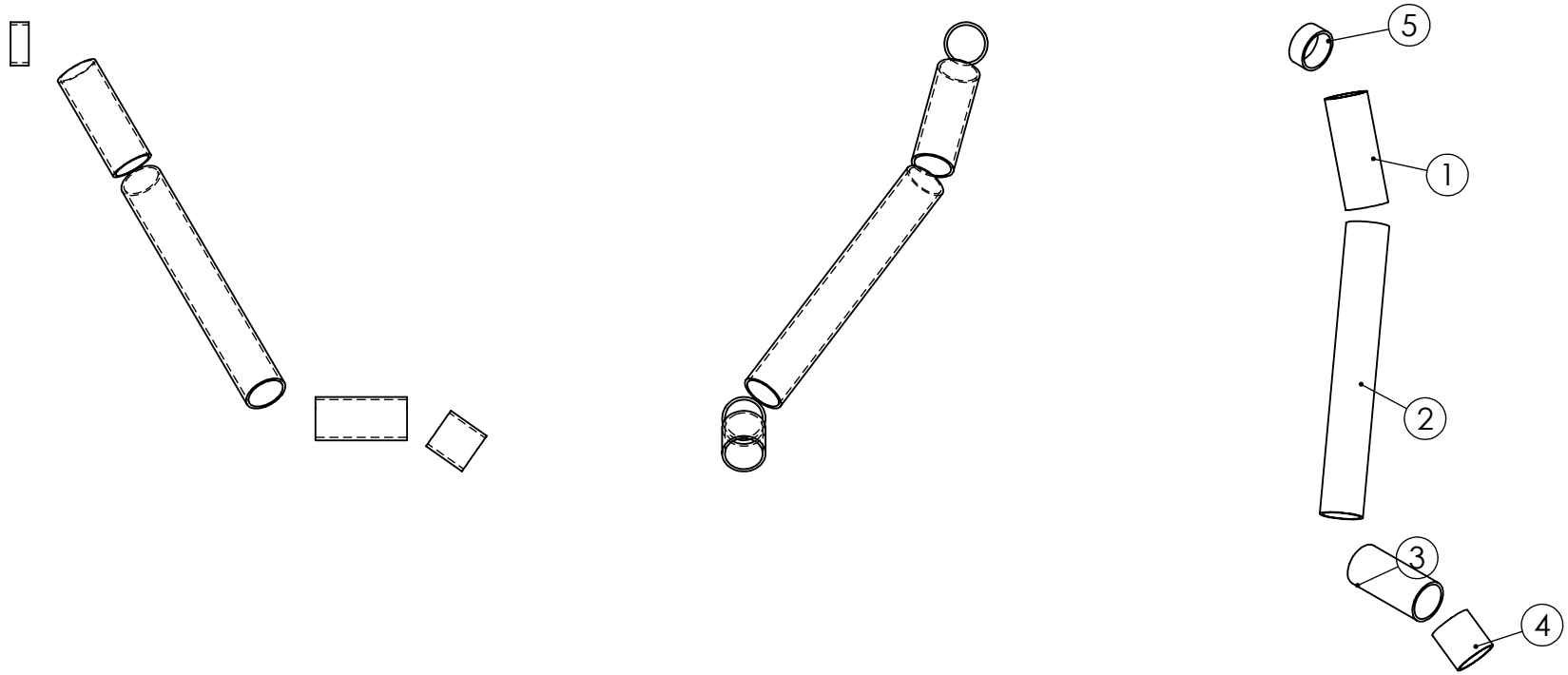

MATERIAL:- 316L STAINLESS STEEL

UNLESS OTHERWISE SPECIFIED: TOLERANCES: MACHINE + / - 0.25mm FABRICATION + / - 1.0 mm

DIMENSIONS IN MILLIMETRES

THIS DRAWING IS THE PROPERTY OF MECHANICAL ENGINEERING & CAD SERVICES (MECS) Pty Ltd & MUST NOT BE MANUFACTURED FROM,COPIED OR TRANSMITTED TO A THIRD PARTY WITHOUT THE PRIOR APPROVAL FROM MECHANICAL ENGINEERING & CAD SERVICES (MECS) Pty Ltd

MECS
Mechanical Engineering & CAD Services
11 Campbell Place WAGGA NSW 2650
Ph: - 0409 985 816
Email: nick@mecservices.com.au

THIRD ANGLE PROJECTION

WEIGHT: 4 kg

CLIENT

RODDY ENGINEERING
14 Waratah St TUMUT NSW 2720
Ph: - 02 6947 4039
Email: roddyeng.com.au

TITLE: 50NB SHED 40 PIPE 316L S/S

DWG NO. 3435-50-021-01

A4

DRAWN N DE BRUYN DATE 11/10/2024 SCALE:1:10 SHEET 1 OF 1