ITEM	DRAWING No	DESCRIPTION	QTY.	MASS (kg)
1	OEM-50-150-SO-316L	50NB ANSI 150 Lb SLIP ON FLANGE 316L S/S	1	2.16
2	3435-50-021-02	PIPE LABEL W-021	1	0.01
3	3435-50-021-01	50NB SHED 40 PIPE 316L S/S	1	4.32
4	OEM-50NB-PN6-SO-316L	50NB EN1092 PN6 SLIP ON FLANGE 316L S/S	1	1.42
5	OEM-50-LRx35-40-316L	50NB LONG RADIUS BEND SHED 40 TRIMMED TO 35 DEGRESS 316L S/S	1	0.26
6	OEM-50-LRx65-40-316L	50NB LONG RADIUS BEND SHED 40 TRIMMED TO 65 DEGRESS 316L S/S	1	0.48
7	OEM-50-LRx20-40-316L	50NB LONG RADIUS BEND SHED 40 TRIMMED TO 20 DEGRESS 316L S/S	1	0.15
8	OEM-50-LRx60-40-316L	50NB LONG RADIUS BEND SHED 40 TRIMMED TO 60 DEGRESS 316L S/S	1	0.44

RED EYE QR CODE AREA

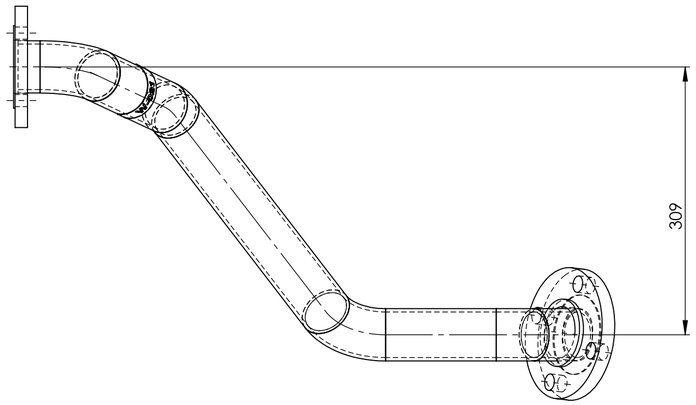

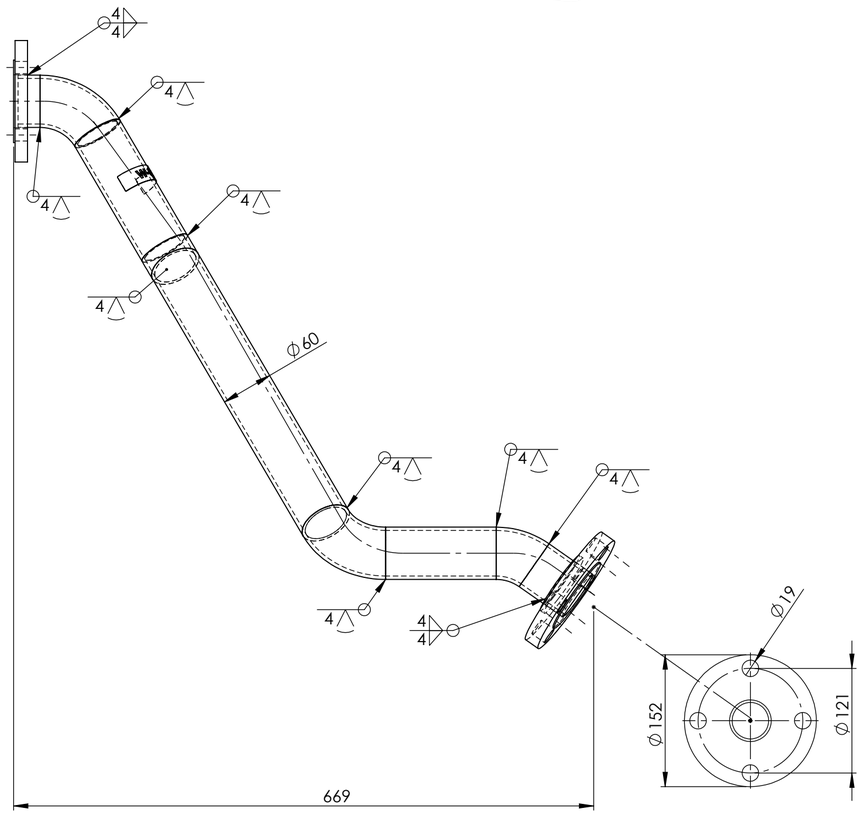

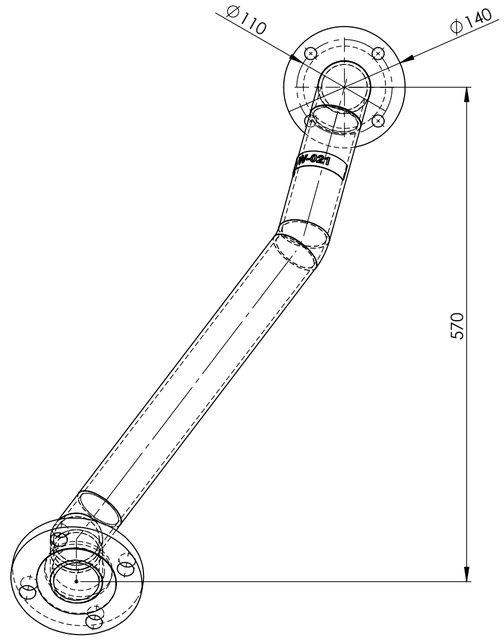

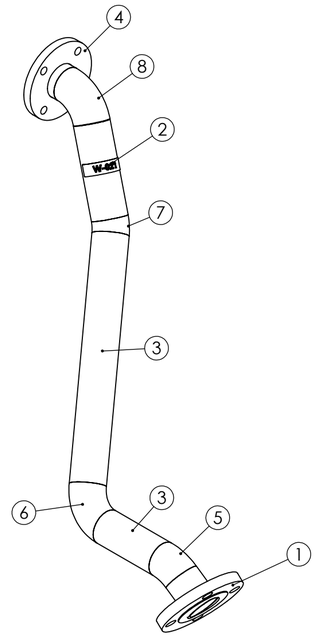

PIPE LABEL - W-021

AS INSTALLED 14/3/25

PIPEWORK MANUFACTURED ON SITE - FLANGES AS PER DRAWING
DIMENSIONS ARE APPROXIMATE

PIPE W-021 ASSEMBLY WEIGHT - 9.23 kg

REV	NAME & DATE	DESCRIPTION

UNLESS OTHERWISE SPECIFIED:
TOLERANCES: MACHINE + / - 0.25mm
FABRICATION + / - 1.0 mm

THIS DRG SUPPLIED BY
RODDY ENGINEERING
14 Waratah St, TUMUT NSW 2720
Ph: 02 6947 4039

DRAWING No. 3435-50-021
REV:

DRAWN N DE BRUYN 11/10/2023
DRAWING CHECKED
DESIGNED
DESIGN CHECKED
SCALE 1:5
APPROVED
WORK ORDER No
SECTION No/KKS
A2 SHEET SIZE

snowyhydro LIMITED

MURRAY 2 POWER STATION
TURBINE COOLING WATER UNIT 11
PIE ASSEMBLY W021

SMA-DRG-NO

REV

SHEET 1 OF 1