ITEM NO.	DESCRIPTION	LENGTH	MATERIAL	MASS (kg)
1	33x3 CHS	122	316L STAINLESS STEEL	0
2	33x3 CHS	102	316L STAINLESS STEEL	0

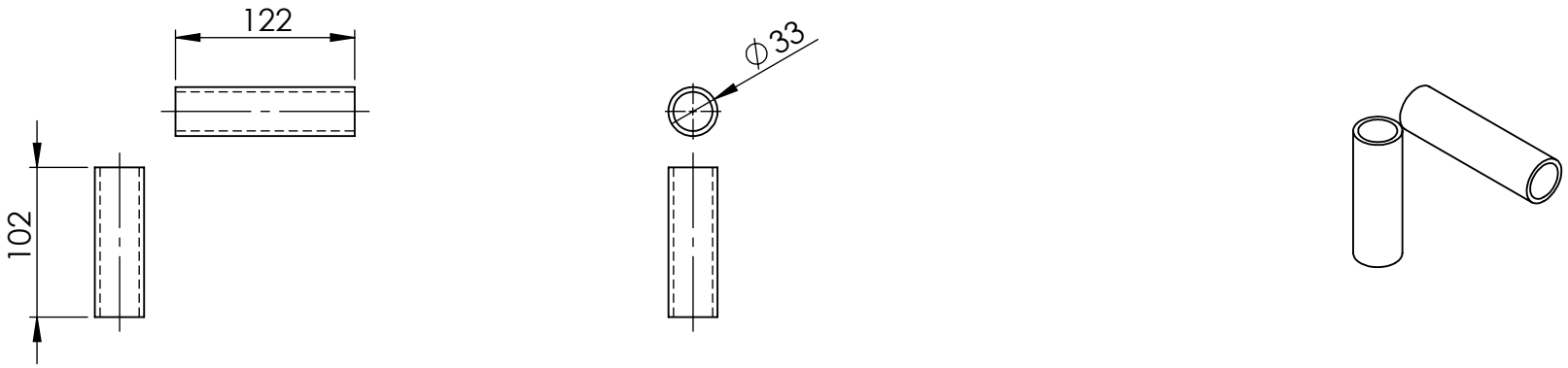

DIMENSIONS REQUIRE CONFIRMING BEFORE WORKSHOP DRAWINGS CAN DONE

MATERIAL:- 316L STAINLESS STEEL

UNLESS OTHERWISE SPECIFIED: TOLERANCES: MACHINE + / - 0.25mm FABRICATION + / - 1.0 mm

DIMENSIONS IN MILLIMETRES

THIS DRAWING IS THE PROPERTY OF MECHANICAL ENGINEERING & CAD SERVICES (MECS) Pty Ltd & MUST NOT BE MANUFACTURED FROM,COPIED OR TRANSMITTED TO A THIRD PARTY WITHOUT THE PRIOR APPROVAL FROM MECHANICAL ENGINEERING & CAD SERVICES (MECS) Pty Ltd

MECS
Mechanical Engineering & CAD Services
11 Campbell Place WAGGA NSW 2650
Ph: - 0409 985 816
Email: nick@mecservices.com.au

THIRD ANGLE PROJECTION

WEIGHT: 1 kg

CLIENT

RODDY ENGINEERING
14 Waratah St TUMUT NSW 2720
Ph: - 02 6947 4039
Email: roddyeng.com.au

TITLE: 25NB SHED 40 316L S/S PIPE

DWG NO. 3435-50-023-01 | A4

DRAWN N DE BRUYN | DATE 13/10/2024 | SCALE:1:5 | SHEET 1 OF 1