| REVISIONS | | | |
|---|---|---|---|
| REV. | DESCRIPTION | DATE | APPROVED |
| A | SOCKET DIRECTION CHANGED & THREADED PIPE REMOVED & REPLACED WITH SOCKET | 7/02/2025 | NDB |

| ITEM | DRAWING No | DESCRIPTION | QTY. | MASS (kg) |
|---|---|---|---|---|
| 1 | OEM-25-T-40-316L | 25NB BUTT WELD TEE SHED 40 316 S/S | 1 | |
| 2 | OEM-25-150-SO-316L | 25NB - 150 Lb ANSI SLIP ON FLANGE 316L S/S | 1 | 0.84 |
| 3 | OEM-20-150-316-S | 3/4 " BSP 150lb 316 S/S SOCKET | 2 | 0.18 |
| 4 | 3435-50-026-03 | PIPE LABEL W-026 | 1 | 0.01 |
| 5 | 3435-50-026-01 | 25NB SHED 40 316L S/S PIPE BEND | 1 | 2.70 |

RED EYE QR CODE AREA

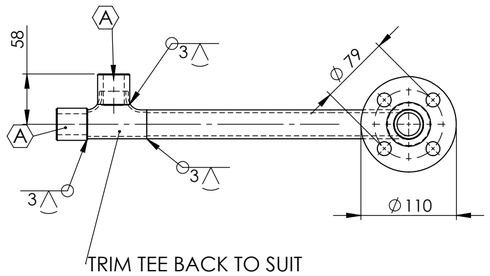


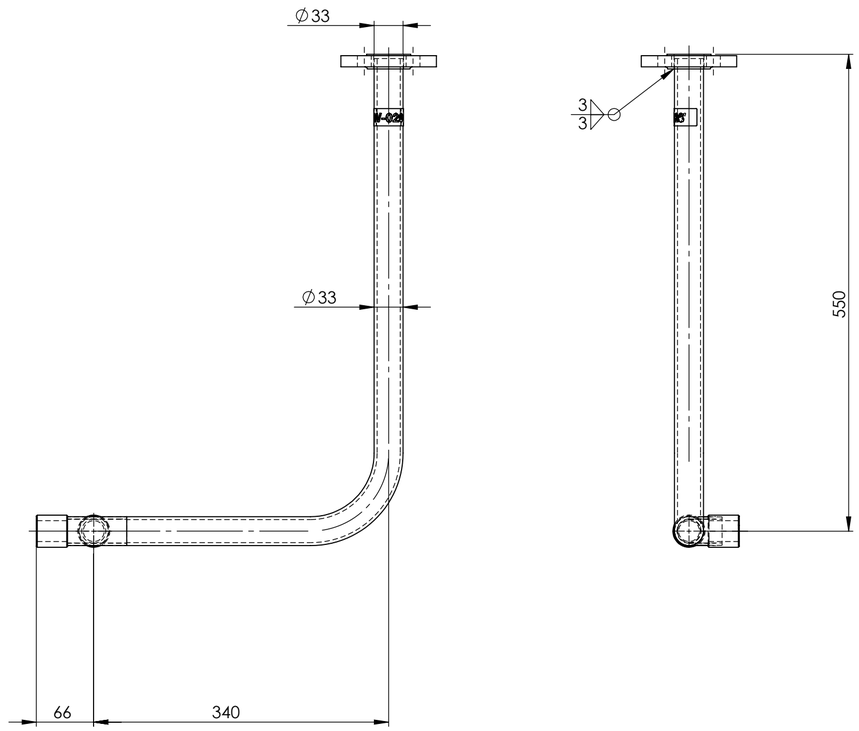


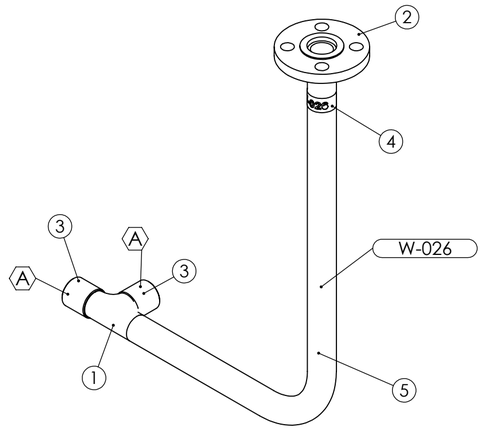


**PIPE LABEL - W-026**

**PIPEWORK MANUFACTURED OF A JIG - FLANGES AS PER DRAWING**
**DIMENSIONS ARE APPROXIMATE**

PIPE W-026 ASSEMBLY WEIGHT - 3.45 kg

**AS INSTALLED 14/3/25**

| REV | NAME & DATE | DESCRIPTION |
|---|---|---|

UNLESS OTHERWISE SPECIFIED:
TOLERANCES: MACHINE + / - 0.25mm
FABRICATION + / - 1.0 mm

THIS DRG SUPPLIED BY
RODDY ENGINEERING
14 Waratah St, TUMUT NSW 2720
Ph: 02 6947 4039

DRAWING No. 3435-50-026 REV: A

DRAWN N DE BRUYN 11/10/2024
DRAWING CHECKED
DESIGNED
DESIGN CHECKED
SCALE 1:5
WORK ORDER No
APPROVED
SECTION No/KKS
A2 SHEET SIZE

snowyhydro LIMITED

M2 POWER STATION
TURBINE COOLING WATER UNIT 11
PIPE W026 ASSEMBLY

SMA-DRG-NO | A | REV | SHEET 1 OF 1