| ITEM | DRAWING No | DESCRIPTION | QTY. | MASS (kg) |
|---|---|---|---|---|
| 1 | OEM-50-PN16-SO-316L | 50NB FLANGE AS4087 PN16 SLIP ON 316L S/S | 2 | 1 |
| 2 | 3435-50-213-01 | 50NB SHED 40 316 S/S PIPE | 1 | 1.24 |

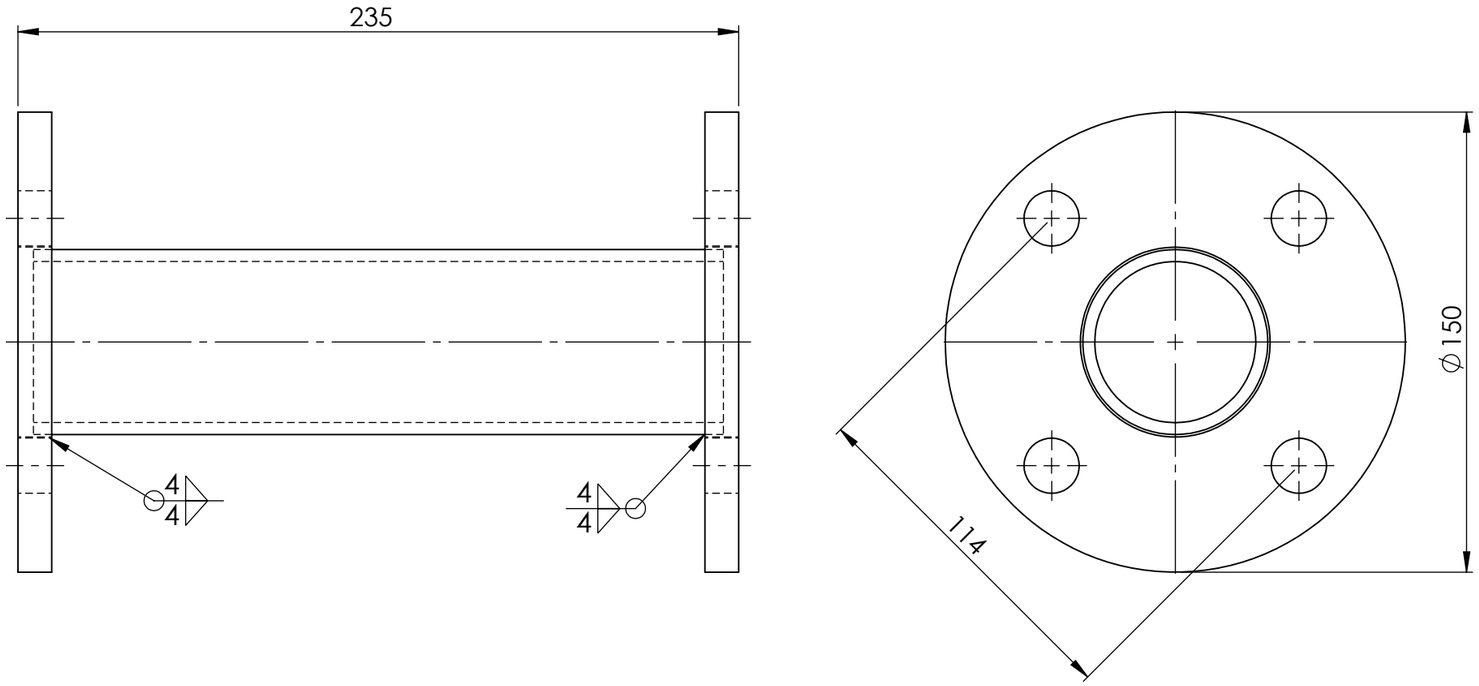


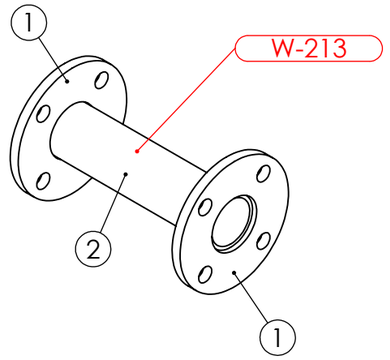


**PIPEWORK ASSEMBLIED ON SITE - FLANGES AS PER DRAWING**
**DIMENSIONS ARE APPROXIMATE**

**AS INSTALLED 6/3/25**

PIPE W-213 ASSEMBLY WEIGHT - 3.65 kg

| REV. | NAME & DATE | DESCRIPTION | DATE | APPROVED |
|---|---|---|---|---|

REVISIONS

UNLESS OTHERWISE SPECIFIED:
TOLERANCES: MACHINE + / - 0.25mm
FABRICATION + / - 1.0 mm

THIS DRG SUPPLIED BY
RODDY ENGINEERING
14 Waratah St, TUMUT NSW 2720
Ph: 02 6947 4039

DRAWING No. 3435-50-213
REV:

DRAWN N DE BRUYN 4/11/2024
DRAWING CHECKED
DESIGNED
DESIGN CHECKED
SCALE 1:2
WORK ORDER No
APPROVED
SECTION No/KKS
A3 SHEET SIZE

snowyhydro LIMITED

M2 POWER STATION
UNIT 11 TURBINE COOLING WATER
PIPE W- 213 ASSEMBLY

**SMA-DRG-NO**

REV

SHEET 1 OF 1

0,0