DIMENSIONS IN MILLIMETRES

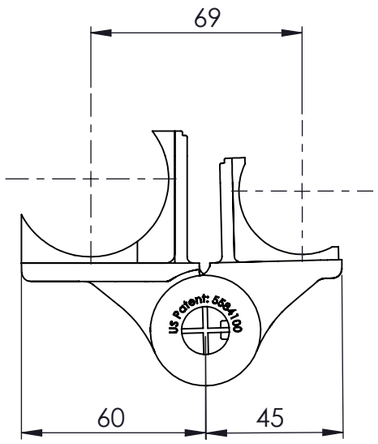

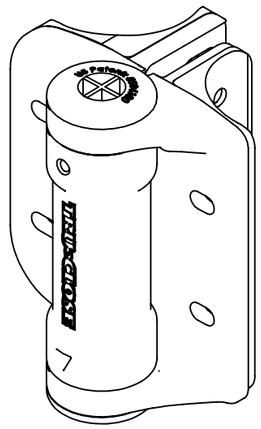

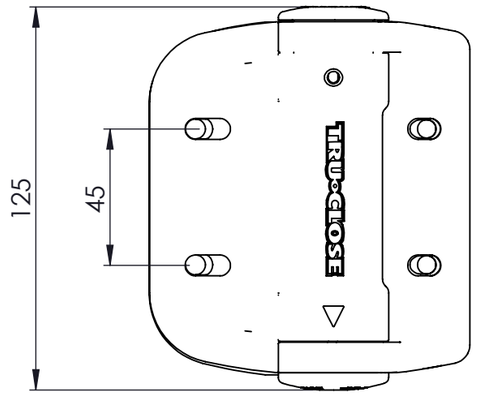

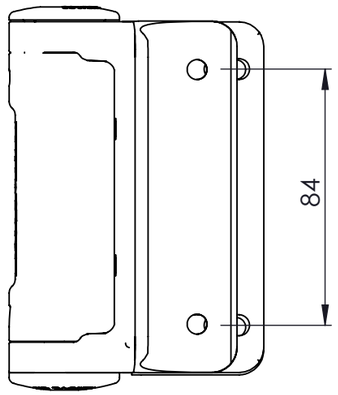

HINGE SPECIFICATIONS

Brand	TruClose®
Product Code	TCHDRND1S3, TCHDRND2S3
Gate Application	Front Gate, Side Gate, Pedestrian Gate, Pet Gate, Playground Gate, Public/Commercial Gate, Security Gate, Privacy Gate
Gate Type	Self-Closing
Gate Material	Chain Link
Self-Closing Gate Weight	Up to 60kg (132lbs)
Approx Gate Size	1.2m W x 1.8m H (4ft x 6ft)
Gate Frame/Post Shape	Round-to-Round
Min Post Size	Round
Ideal Gate Gap	Fixed 25mm (1")
Fixing Method	Screw-On
Color/Finish	Black
Round Post Diameter	TCHDRND1S3: Gate frame: 35 & 41mm, Post: 48-51, 60 & 73mm TCHDRND2S3: Gate frame: 48-51mm, Post: 48-51 & 73mm

FASTENERS FOR HINGE TO POST

GENERAL APPLICATIONS - FIXING TO THICK STEEL

Hex Head Series 500® Teks®

Application

Buildex® 12-24 Hex Head Series 500® Teks® Screw is used for metal to metal fixing of thick steel purlin and hot rolled steel. Used for metal to metal fixing in the HAVAC, plumbing and steel fabrication industries where thick steel section is in use. A general all purpose metal to thick metal fixing product with a drill capacity of up to 12mm.

Features & Benefits

- Versatile all purpose fastener for fixing into thick steel
- Teks® point for fast and easy application into steel up to 12mm thick
- High pull-out strength
- Climaseal® 3 corrosion protection available

REFERENCE MAIN ASSEMBLY DRAWING NUMBER:-

Australian Standard 1657 - 2018

PRESENTED FOR APPROVAL

Accepted .....

Date ...../...../.....

REV	NAME & DATE

UNLESS OTHERWISE SPECIFIED:
TOLERANCES: MACHINE + / - 0.25mm
FABRICATION + / - 1.0 mm

THIS DRAWING BY
RODDY ENGINEERING
14 Waratah St, TUMUT NSW 2720
Ph: 02 6947 4039

DRAWING No. 3467-95-05 REV:

DRAWN N DE BRUYN 7/12/2020	DRAWING CHECKED
DESIGNED	DESIGN CHECKED
SCALE:1:2	APPROVED
SECTION No.	SHEET SIZE A3

snowyhydro Limited
renewable energy

TRUCLOSE ROUND HEAVY DUTY
SELF CLOSING HINGE

SMA-DRG-NO

REV REV

SHEET 1 OF 1

297
420