420, 297

ITEM NO.	QTY.	DESCRIPTION	LENGTH
1	1	42x3 CHS	686
2	1	42x3 CHS	750
3	2	42x3 CHS	927

ITEM	DWG No	PART No	DESCRIPTION	QTY.
1	3467-95-10-10		GATE 980H x 750 CTS	1
2	OEM-32NB-SRB		32NB SHORT RADIUS BEND	2
3	3467-95-05	TCHDRND1S3	TRUCLOSE ROUND HEAVY DUTY SELF CLOSING HINGE	2

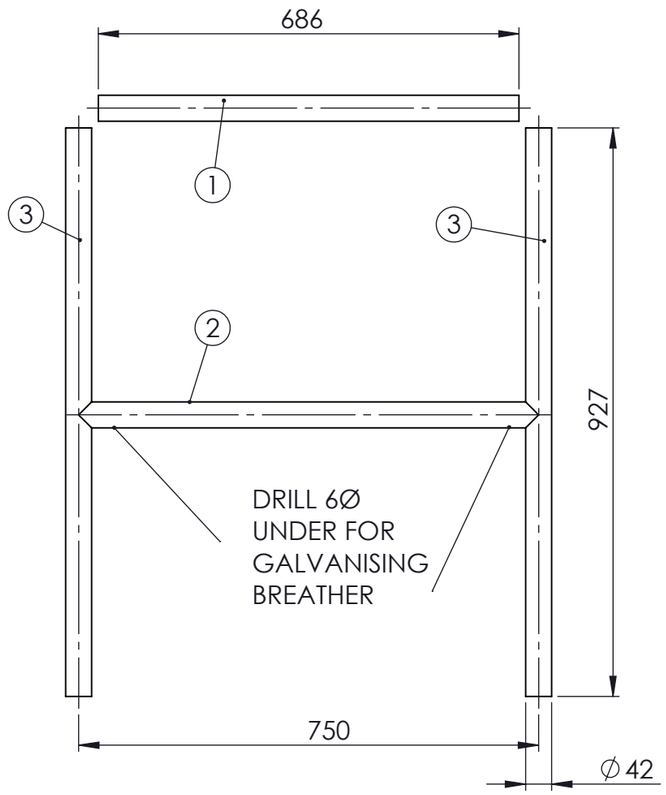

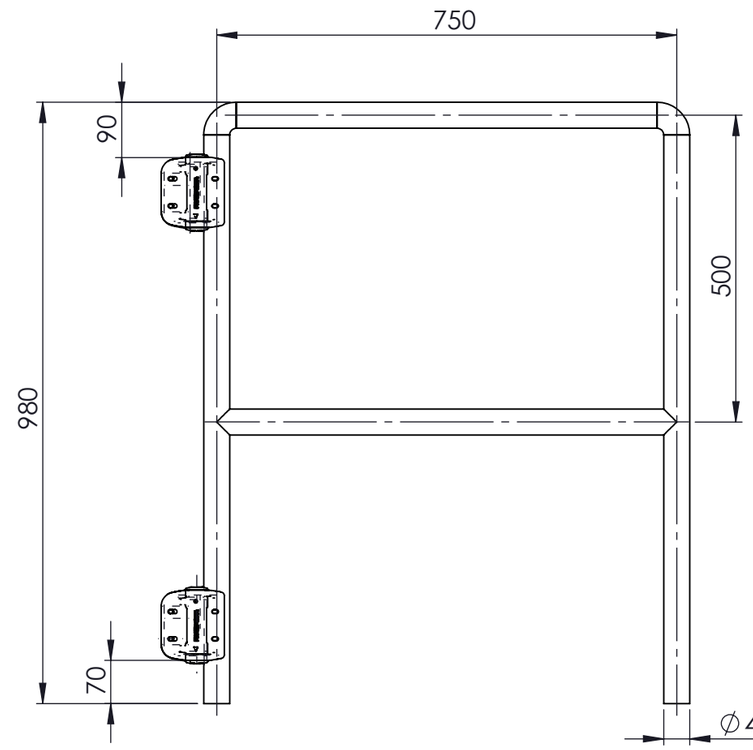

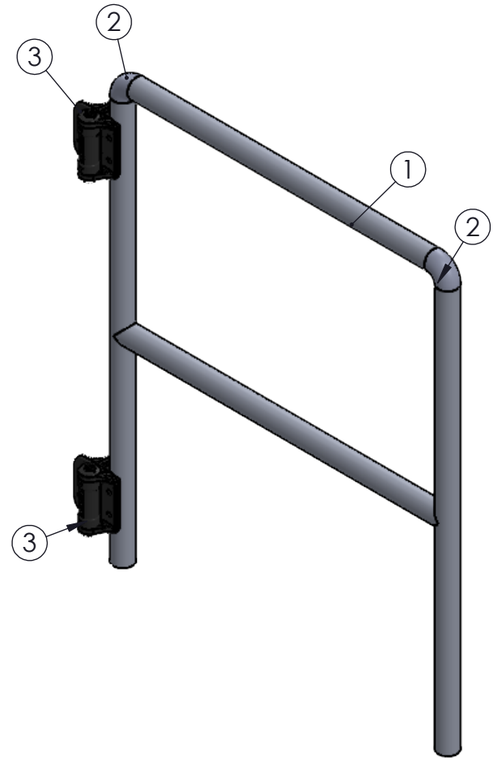

ALL WELDS - 6CFW Unless noted otherwise

PRESENTED FOR APPROVAL

Accepted .....

Date ...../...../.....

REV	NAME & DATE	DESCRIPTION

UNLESS OTHERWISE SPECIFIED:
TOLERANCES: MACHINE + / - 0.25mm
FABRICATION + / - 1.0 mm

THIS DRG SUPPLIED BY
RODDY ENGINEERING
14 Waratah St, TUMUT NSW 2720
Ph: 02 6947 4039

DRAWING No. 3467-95-10
REV:

DRAWN N DE BRUYNN DE BRUYN 7/12/2020	DRAWING CHECKED N. RODDY 22/12/2020
DESIGNED N DE BRUYN 7/12/2020	DESIGN CHECKED
SCALE 1:10 WORK ORDER No	APPROVED
SECTION No/KKS	A3 SHEET SIZE

snowyhydro LIMITED

M2 DAM WALL
LADDER SAFETY GATE LH 980H 750 CTS

SMA-DRG-NO

REV

SHEET 1 OF 1

0,0