ITEM	DWG No	DESCRIPTION	QTY.
1	3467-95-10	LADDER SAFETY GATE LH 980H 750 CTS	1
2	3467-95-12	LADDER SAFETY GATE RH 980H 750 CTS	1

RED EYE
QR CODE
AREA

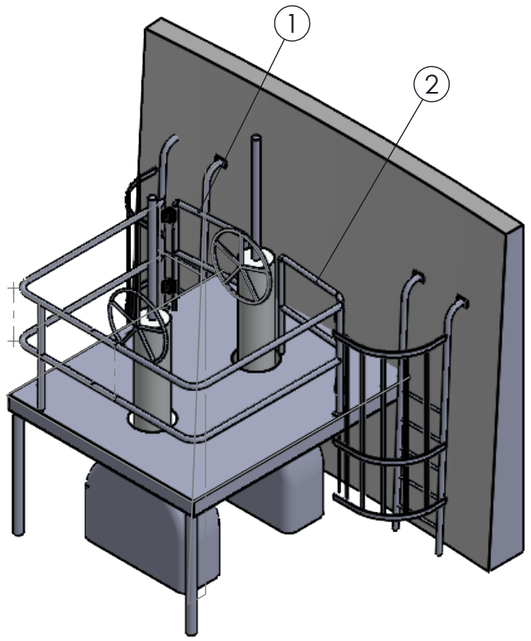

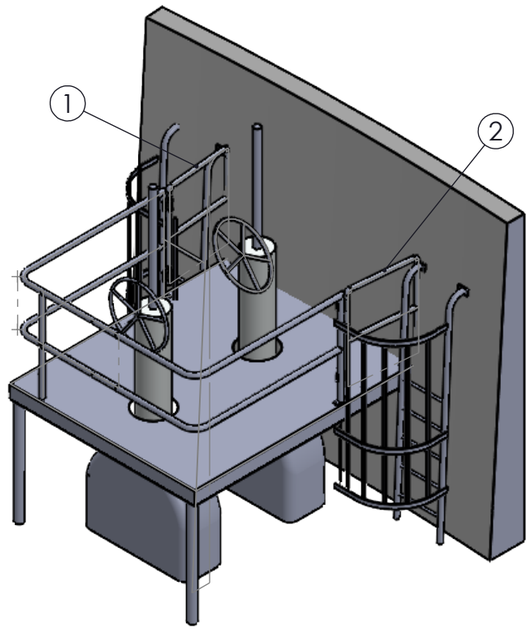

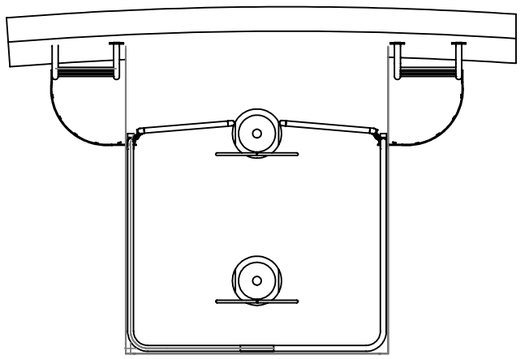

GATE OPEN

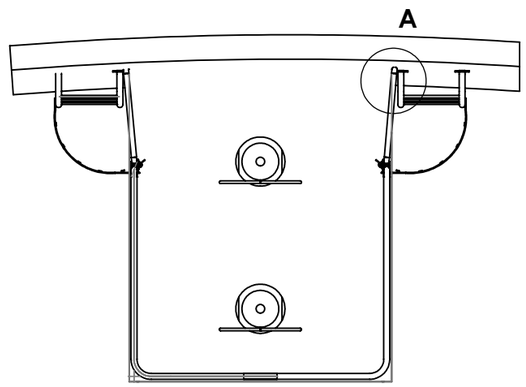

GATE CLOSED

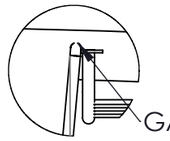

GATE CLOSES ON
LADDER STYLE

DETAIL A
SCALE 1 : 25

PRESENTED FOR APPROVAL

Accepted .....

Date ...../...../.....

REV	NAME & DATE	DESCRIPTION

UNLESS OTHERWISE SPECIFIED:
TOLERANCES: MACHINE + / - 0.25mm
FABRICATION + / - 1.0 mm

THIS DRG SUPPLIED BY
RODDY ENGINEERING
14 Waratah St, TUMUT NSW 2720
Ph: 02 6947 4039

DRAWING No. 3467-MU103-03
REV:

DRAWN N DE BRUYN 7/12/2020	DRAWING CHECKED N. RODDY 22/12/2020
DESIGNED N DE BRUYN 7/12/2020	DESIGN CHECKED
SCALE 1:50 WORK ORDER No	APPROVED
SECTION No/KKS	A3 SHEET SIZE

snowyhydro LIMITED

M2 DAM WALL OUTLET VALVE
OUTLET VALVE PLATFORM GATE ASSEMBLIES

SMA-DRG-NO

REV

SHEET 1 OF 1

0,0