594,420

ITEM	DWG No	DESCRIPTION	QTY.	WEIGHT
1	3484-MU103-25	SWING BAR (42 OD CHS)	1	
2	3484-MU103-20	TOP RAIL HINGE ASSEMBLY	1	
3	3483-MU103-40	SAFETY SIGN - ALWAYS FACE LADDER	1	2
4	3467-MU103-10	MU103 C3 LADDER CAGE ASSEMBLY	1	162
5		M12x40 GAL BOLT Gr 8.8 NUT & FW	16	0

RED EYE
QR CODE
AREA

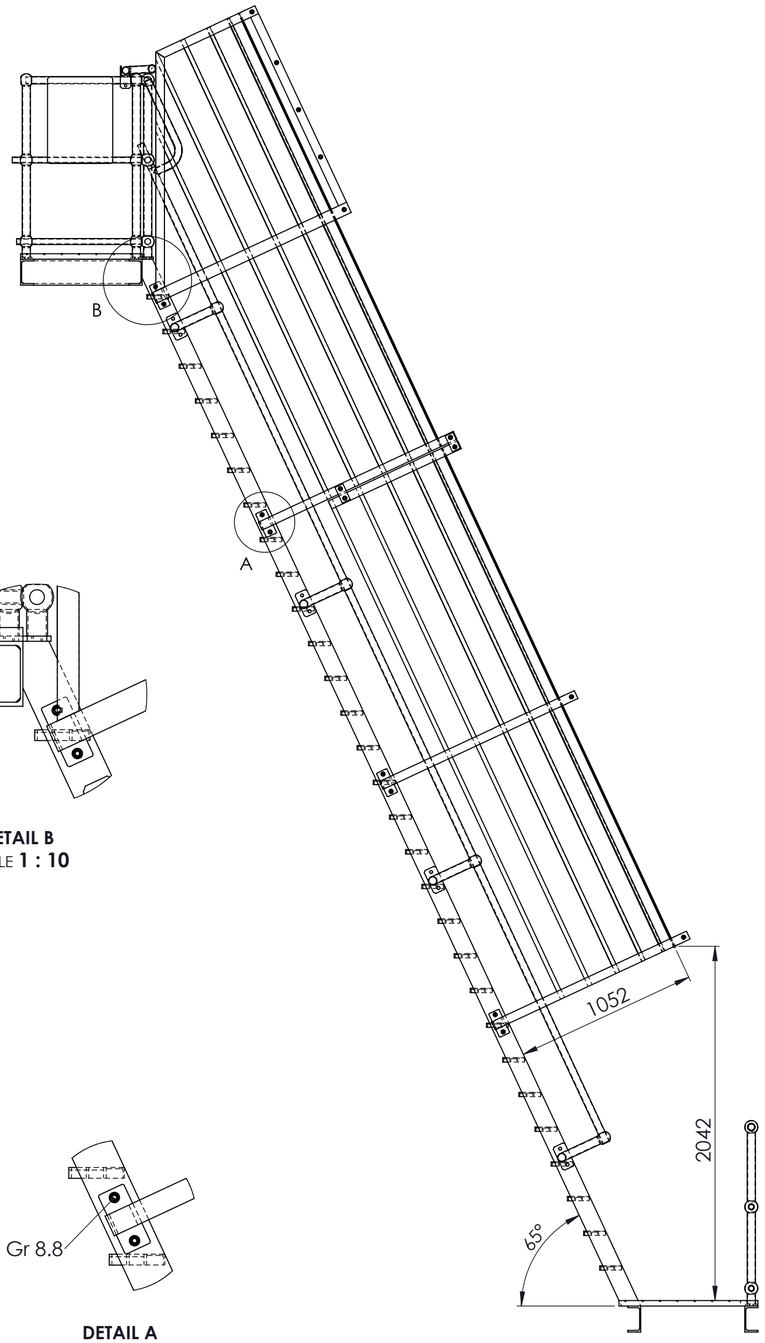

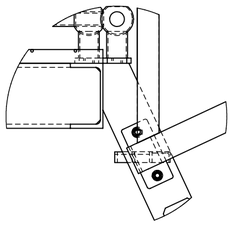

DETAIL B
SCALE **1 : 10**

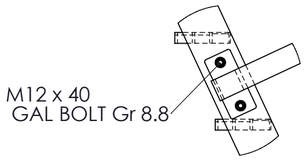

DETAIL A
SCALE 1 : 10

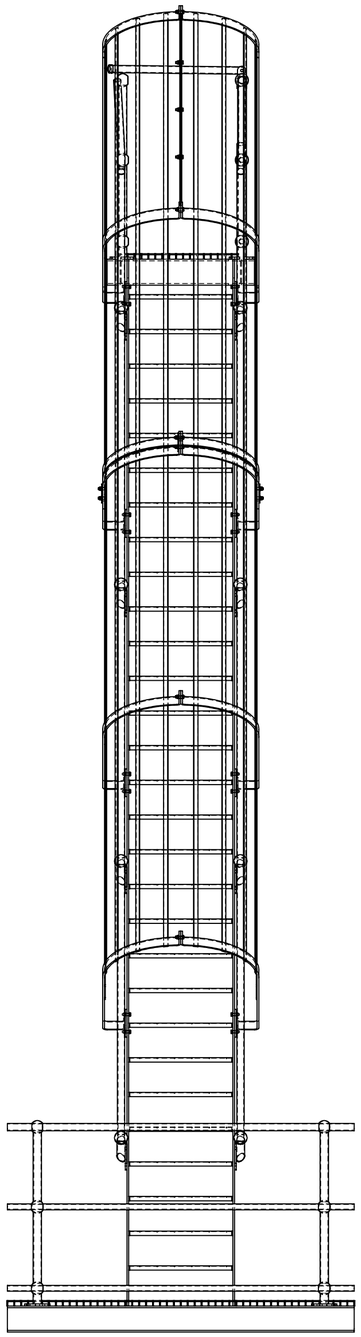

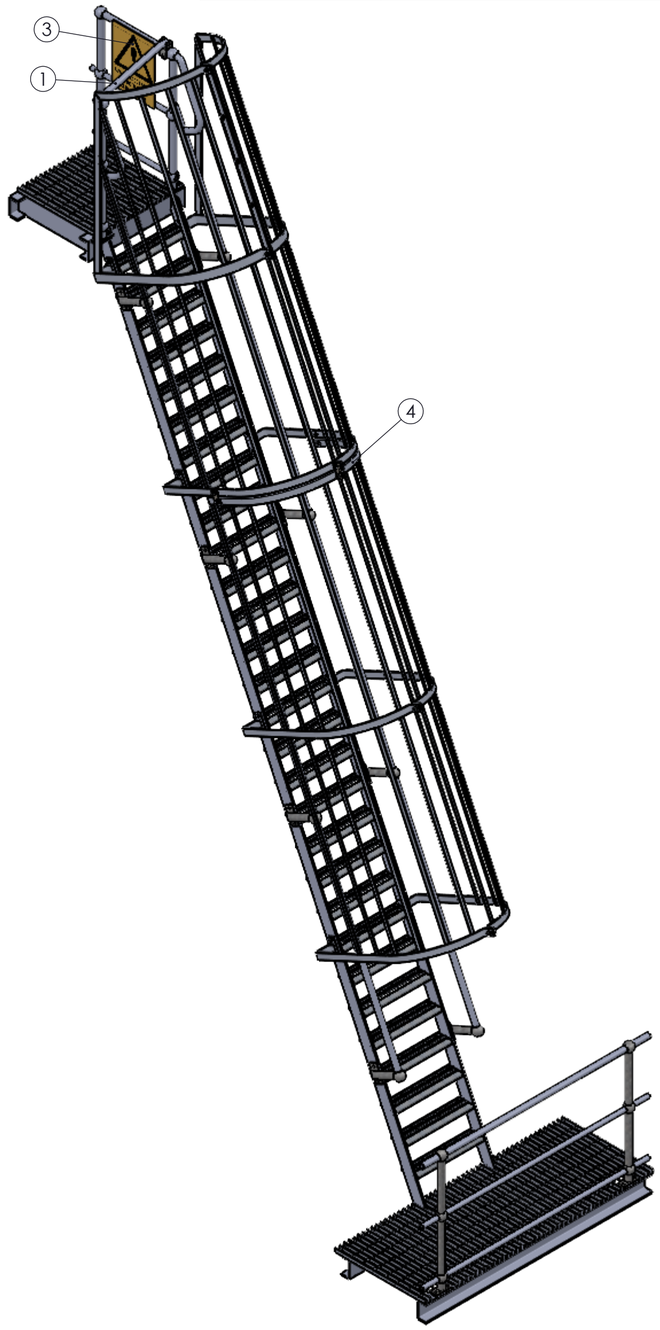

PRESENTED FOR APPROVAL

Accepted .....

Date .....

REV	NAME & DATE	DESCRIPTION

UNLESS OTHERWISE SPECIFIED:
TOLERANCES: MACHINE + / - 0.25mm
FABRICATION + / - 1.0 mm

THIS DRG SUPPLIED BY
RODDY ENGINEERING
14 Waratah St, TUMUT NSW 2720
Ph: 02 6947 4039

DRAWING No. 3467-MU103-05 REV:

DRAWN	DRAWING CHECKED
N DE BRUYN N DE BRUYN 30/11/2020	N. RODDY 22/12/2020
DESIGNED N DE BRUYN 30/11/2020	DESIGN CHECKED
SCALE 1:25 WORK ORDER No	APPROVED
SECTION No/KKS	A2 SHEET SIZE

snowyhydro LIMITED

M2 DAM WALL
MU103 CAGE 3 GENERAL ARRANGEMENT

SMA-DRG-NO

REV

SHEET 1 OF 1

0,0