DIMENSIONS IN MILLIMETRES

ITEM	DWG No	DESCRIPTION	QTY.	WEIGHT
1	3467-MU103-20	MU103 CAGE RIGHT SIDE TOP ASSEMBLIED	1	43
2	3467-MU103-22	MU103 CAGE RIGHT SIDE BOTTOM ASSEMBLIED	1	37
3	3467-MU103-25	MU103 CAGE LEFT SIDE TOP ASSEMBLIED	1	43
4	3467-MU103-27	MU103 CAGE LEFT SIDE BOTTOM ASSEMBLIED	1	37
5	3467-MU103-20-42	HOOP JOINER PLATE	3	0
6		M12x40 GAL BOLT Gr 8.8 NUT & FW	4	0
7		M12x45 BOLT NUT F/W	2	0
8		M12x35 GAL BOLT Gr 8.8 NUT FW	4	0
9		M12x35 GAL BOLT Gr 8.8 NUT F/W	3	0

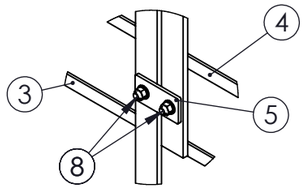

DETAIL A
SCALE 1 : 10

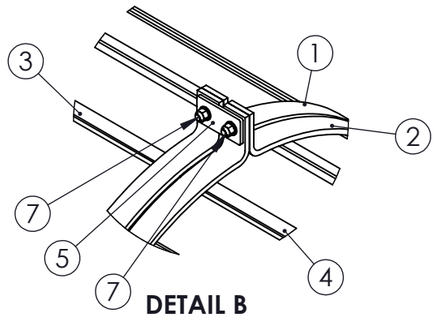

DETAIL B
SCALE 1 : 10

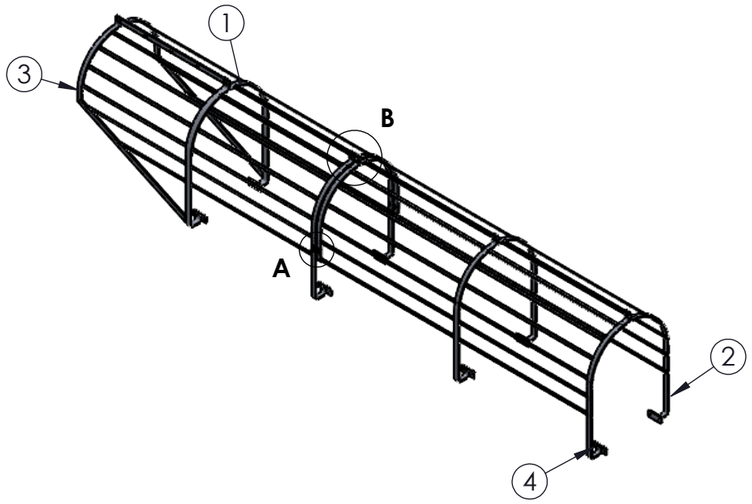

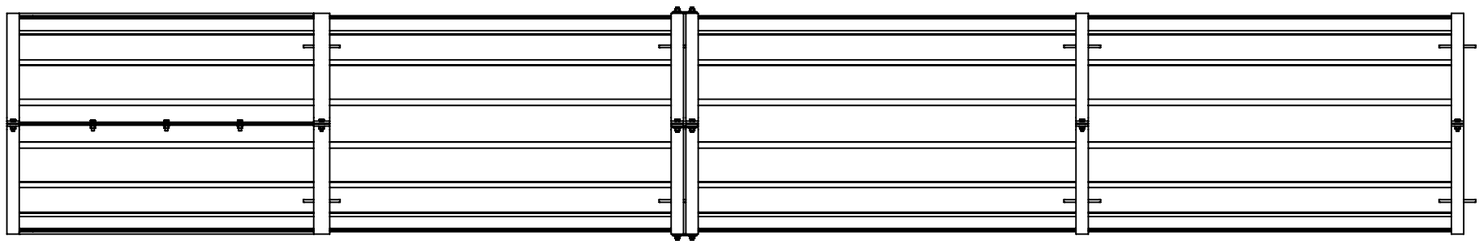

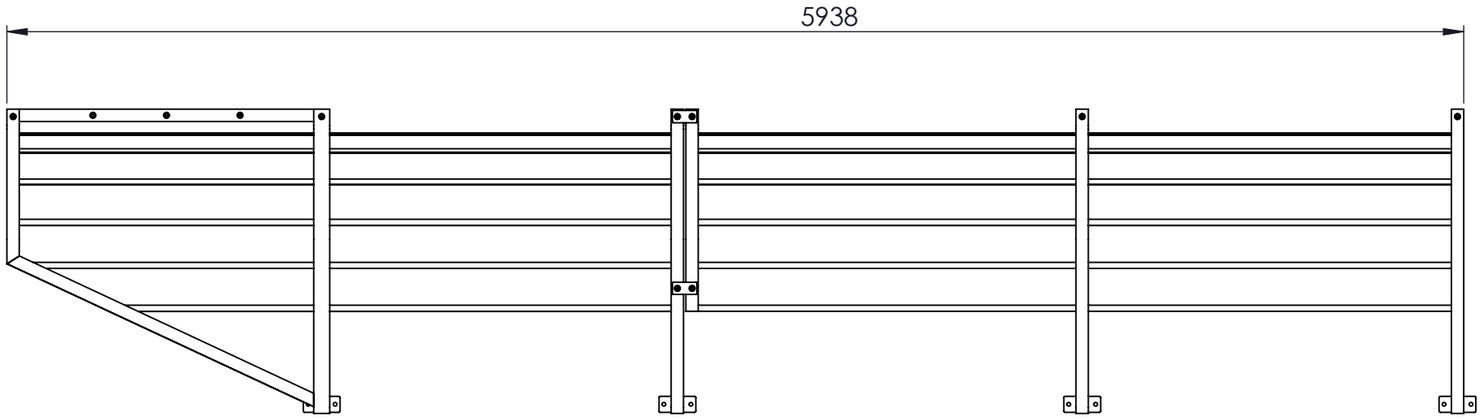

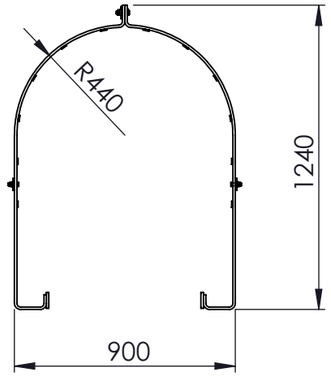

REFERENCE MAIN ASSEMBLY DRAWING NUMBER:- 3467-MU103-05

MU103 C3 LADDER CAGE ASSEMBLY WEIGHT - 162 kg

Australian Standard 1657 - 2018

PRESENTED FOR APPROVAL

Accepted .....

Date ...../...../.....

REV	NAME & DATE

UNLESS OTHERWISE SPECIFIED:
TOLERANCES: MACHINE + / - 0.25mm
FABRICATION + / - 1.0 mm

THIS DRAWING BY
RODDY ENGINEERING
14 Waratah St, TUMUT NSW 2720
Ph: 02 6947 4039

DRAWING No. 3467-MU103-10 **REV:**

DRAWN N DE BRUYN 9/12/2020	**DRAWING CHECKED** N. RODDY 22/12/2020
DESIGNED N DE BRUYN 9/12/2020	**DESIGN CHECKED**
SCALE:1:25	**APPROVED**
SECTION No.	**SHEET SIZE** A3

snowyhydro Limited
renewable energy

MU103 C3 LADDER CAGE ASSEMBLY

SMA-DRG-NO

REV REV

SHEET 1 OF 1

297
420