DIMENSIONS IN MILLIMETRES

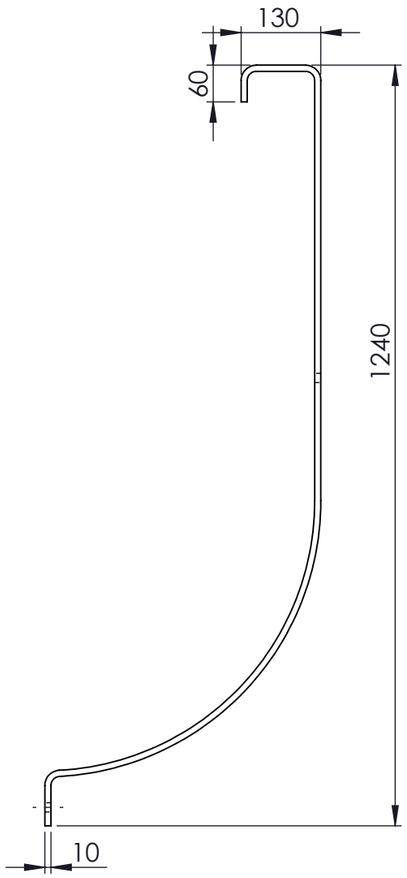

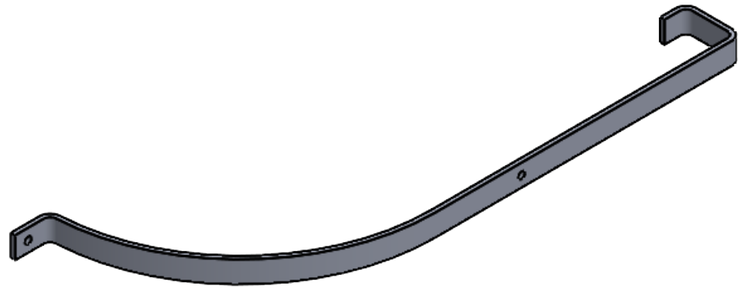

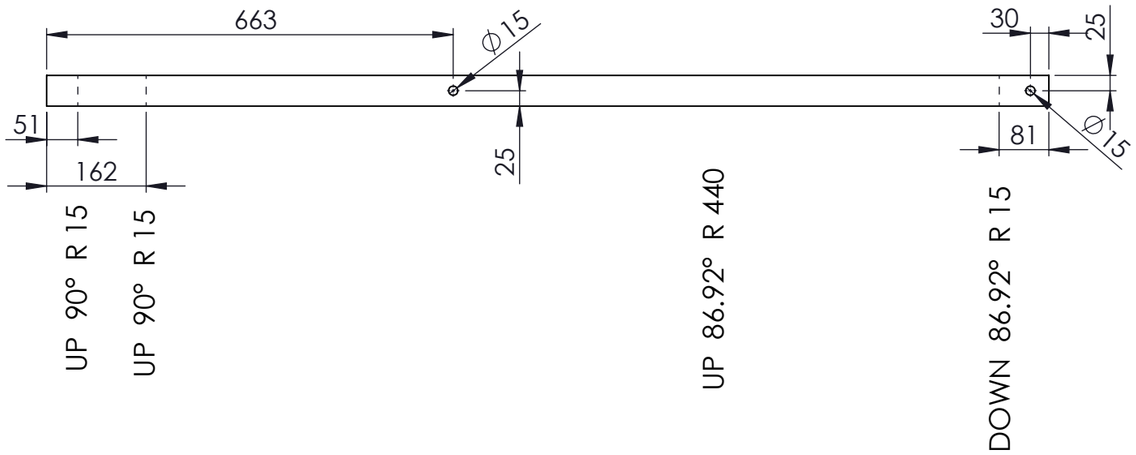

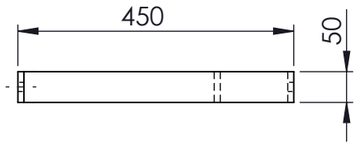

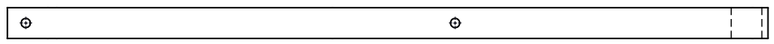

REFERENCE MAIN ASSEMBLY DRAWING NUMBER:-

HOOP HALF HOLED 50 x 10 FLAT BAR WEIGHT - 6.3 kg

Australian Standard 1657 - 2018

REV	NAME & DATE		UNLESS OTHERWISE SPECIFIED: TOLERANCES: MACHINE + / - 0.25mm FABRICATION + / - 1.0 mm	**DRAWN** N DE BRUYN 30/11/2020	**DRAWING CHECKED**	snowyhydro Limited renewable energy
			THIS DRAWING BY MECS **Mechanical Engineering & CAD Services** 11 Campbell Place WAGGA NSW 2650 Ph: - 0409 985 816 Email: mecs1@bigpond.com	**DESIGNED**	**DESIGN CHECKED**	HOOP HALF HOLED 50 x 10 FLAT BAR
				SCALE:1:10	**APPROVED**	
			DRAWING No. 3467-MU103-20-32 **REV:**	**SECTION No.**	**SHEET SIZE** A3	**SMA-DRG-NO** **REV** REV SHEET 1 OF 1

297
420