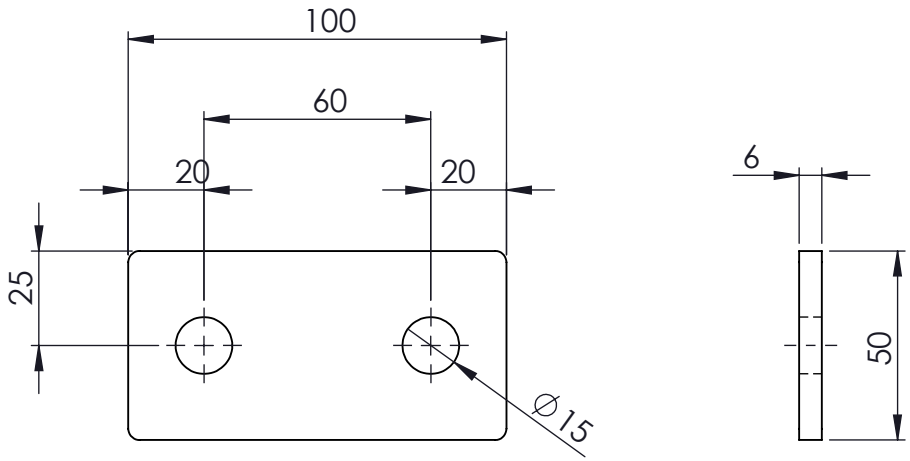

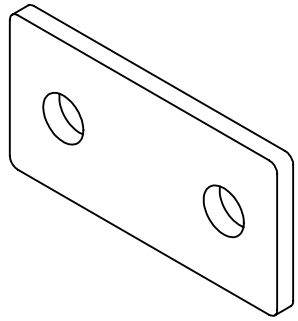

HOOP JOINER PLATE WEIGHT - 0 kg

UNLESS OTHERWISE SPECIFIED: TOLERANCES: MACHINE + / - 0.25mm FABRICATION + / - 1.0 mm

DIMENSIONS IN MILLIMETRES

THIS DRAWING IS THE PROPERTY OF MECHANICAL ENGINEERING & CAD SERVICES (MECS) Pty Ltd & MUST NOT BE MANUFACTURED FROM,COPIED OR TRANSMITTED TO A THIRD PARTY WITHOUT THE PRIOR APPROVAL FROM MECHANICAL ENGINEERING & CAD SERVICES (MECS) Pty Ltd

MECS
Mechanical Engineering & CAD Services
11 Campbell Place WAGGA NSW 2650
Ph: - 0409 985 816
Email: nick@mecservices.com.au

THIRD ANGLE PROJECTION

WEIGHT: 0 kg

CLIENT

RODDY ENGINEERING
14 Waratah St TUMUT NSW 2720
Ph: - 02 6947 4039
Email: roddyeng.com.au

TITLE: HOOP JOINER PLATE

DWG NO. 3467-MU103-20-42		REV	A4
DRAWN N DE BRUYN	DATE 9/12/2020	SCALE:1:2	SHEET 1 OF 2

FART No.: 3467-MH/03-20-42
DESCRIPTION: ACCOUNTING PLATE
MATERIAL: HOT PLATE GRADE 250
THICKNESS: 6
QTY: REFER TO PURCHASE ORDER