DIMENSIONS IN MILLIMETRES

ITEM	DWG No	DESCRIPTION	QTY.	WEIGHT
1	3467-MU103-50	HALF HOOP 65 x10 FB ASSEMBLY	1	9.0
2	3467-MU103-47	HALF HOOP HOLED 50 x10 FB ASSEMBLY	1	7.1
3	3467-MU103-20-15	50x10 FB HOOP END	1	5.3
4	3467-MU103-20-10	50x10 FB CAGE RIGHT SIDE TOP HOOP	1	3.3
5	3467-MU103-20-35	25x5 FB TOP CAGE VERTICAL BAR	6	2.7
6	3467-MU103-20-40	50x6 FB HOOP JOINER	1	2.8

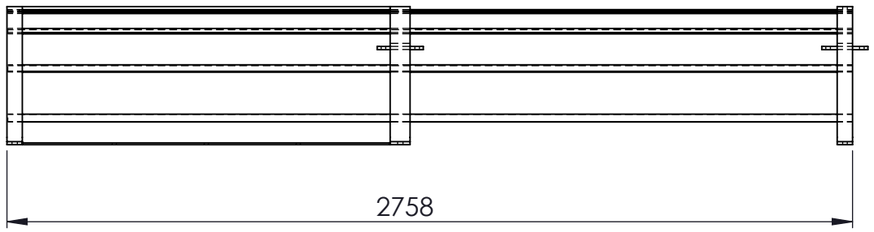

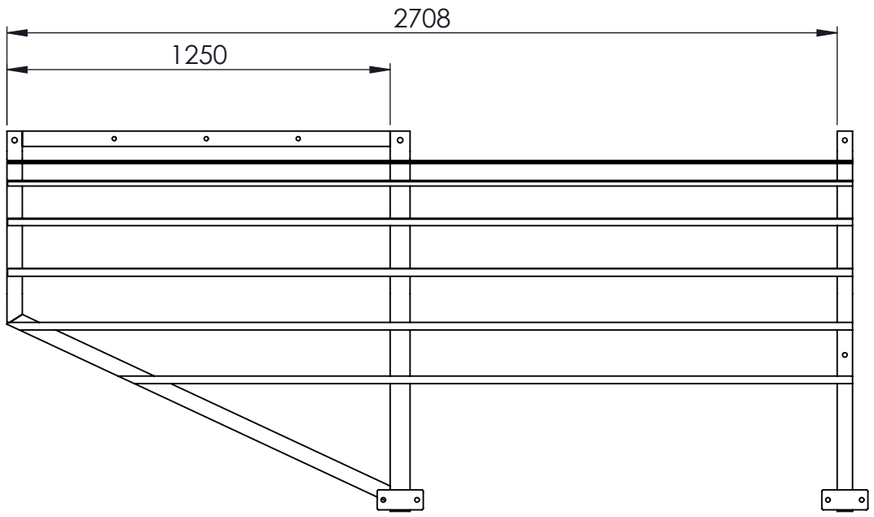

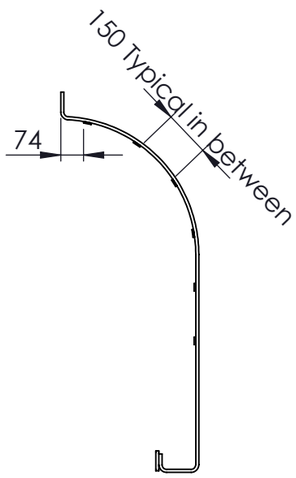

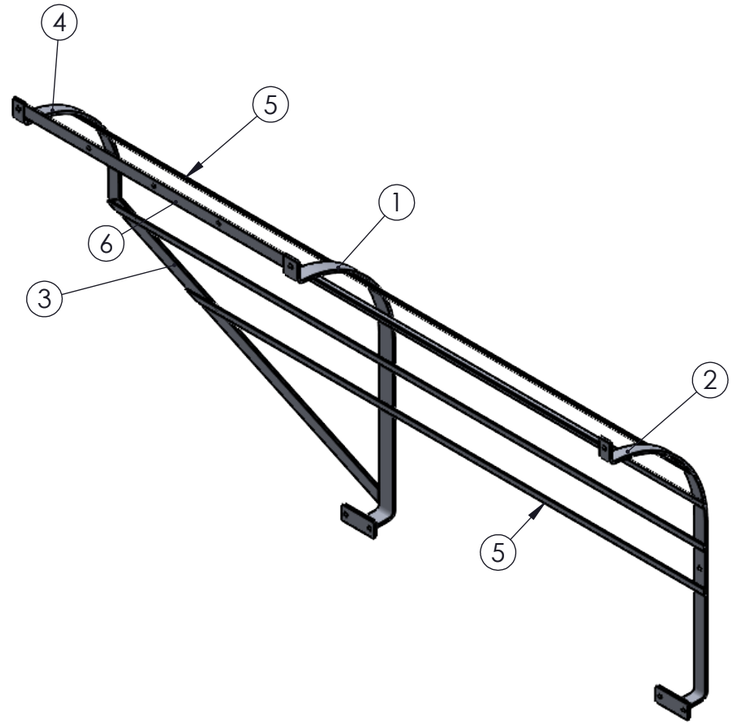

REFERENCE MAIN ASSEMBLY DRAWING NUMBER:- 3467-MU103-05

MU103 CAGE RIGHT SIDE TOP ASSEMBLIED WEIGHT - 43.2 kg

Australian Standard 1657 - 2018

PRESENTED FOR APPROVAL

Accepted .....

Date ...../...../.....

REV | NAME & DATE

UNLESS OTHERWISE SPECIFIED:
TOLERANCES: MACHINE + / - 0.25mm
FABRICATION + / - 1.0 mm

THIS DRAWING BY

RODDY ENGINEERING
14 Waratah St, TUMUT NSW 2720
Ph: 02 6947 4039

DRAWING No. 3467-MU103-20 **REV:**

DRAWN N DE BRUYN 4/12/2020

DRAWING CHECKED N. RODDY 22/12/2020

DESIGNED N DE BRUYN 8/12/2020

DESIGN CHECKED

SCALE:1:20

APPROVED

SECTION No.

SHEET SIZE A3

snowyhydro Limited
renewable energy

MU103 CAGE RIGHT SIDE TOP ASSEMBLIED

SMA-DRG-NO

REV REV

SHEET 1 OF 1

297
420