DIMENSIONS IN MILLIMETRES

ITEM	DWG No	DESCRIPTION	QTY.	WEIGHT
1	3467-MU103-45	HALF 50 x10 FB ASSEMBLY	2	7.1
2	3467-MU103-20-38	HOOP HALF 50 x 10 FLAT BAR	1	4.1
3	3467-MU103-20-36	BOTTOM CAGE VERTICAL BAR 25x5 FB	6	3.1

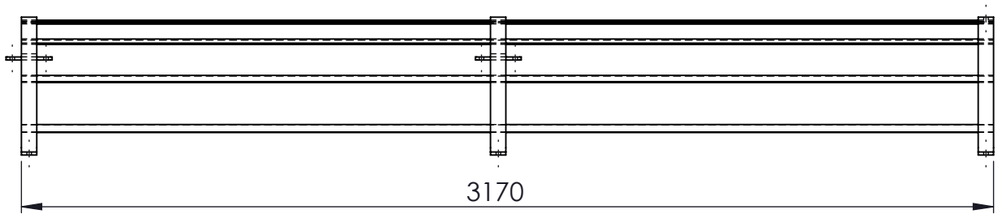

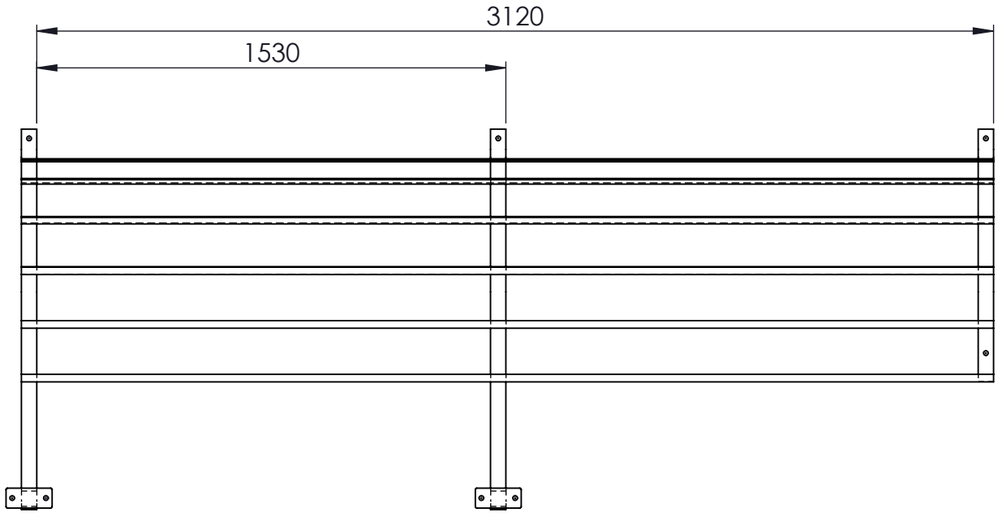

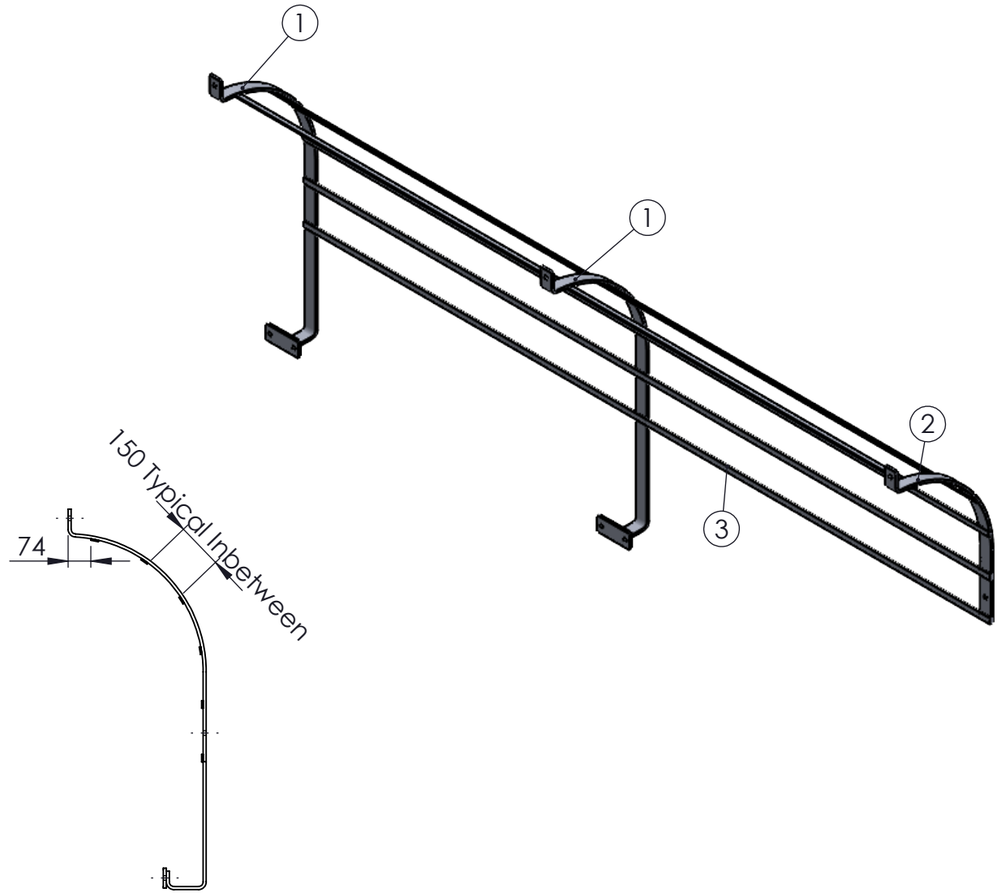

ALL WELDS - 6CFW Unless noted otherwise

REFERENCE MAIN ASSEMBLY DRAWING NUMBER:- 6247-MU103-05

MU103 CAGE LEFT SIDE BOTTOM ASSEMBLIED WEIGHT - 36.8 kg

Australian Standard 1657 - 2018

PRESENTED FOR APPROVAL

Accepted .....

Date ...../...../.....

REV | NAME & DATE

UNLESS OTHERWISE SPECIFIED:
TOLERANCES: MACHINE + / - 0.25mm
FABRICATION + / - 1.0 mm

THIS DRAWING BY

RODDY ENGINEERING
14 Waratah St, TUMUT NSW 2720
Ph: 02 6947 4039

DRAWING No. 3467-MU103-27 **REV:**

DRAWN N DE BRUYN 9/12/2020	**DRAWING CHECKED** N. RODDY 22/12/2020
DESIGNED N DE BRUYN 9/12/2020	**DESIGN CHECKED**
SCALE:1:20	**APPROVED**
SECTION No.	**SHEET SIZE** A3

snowyhydro Limited
renewable energy

MU103 CAGE LEFT SIDE BOTTOM ASSEMBLIED

SMA-DRG-NO

REV REV

SHEET 1 OF 1

297
420