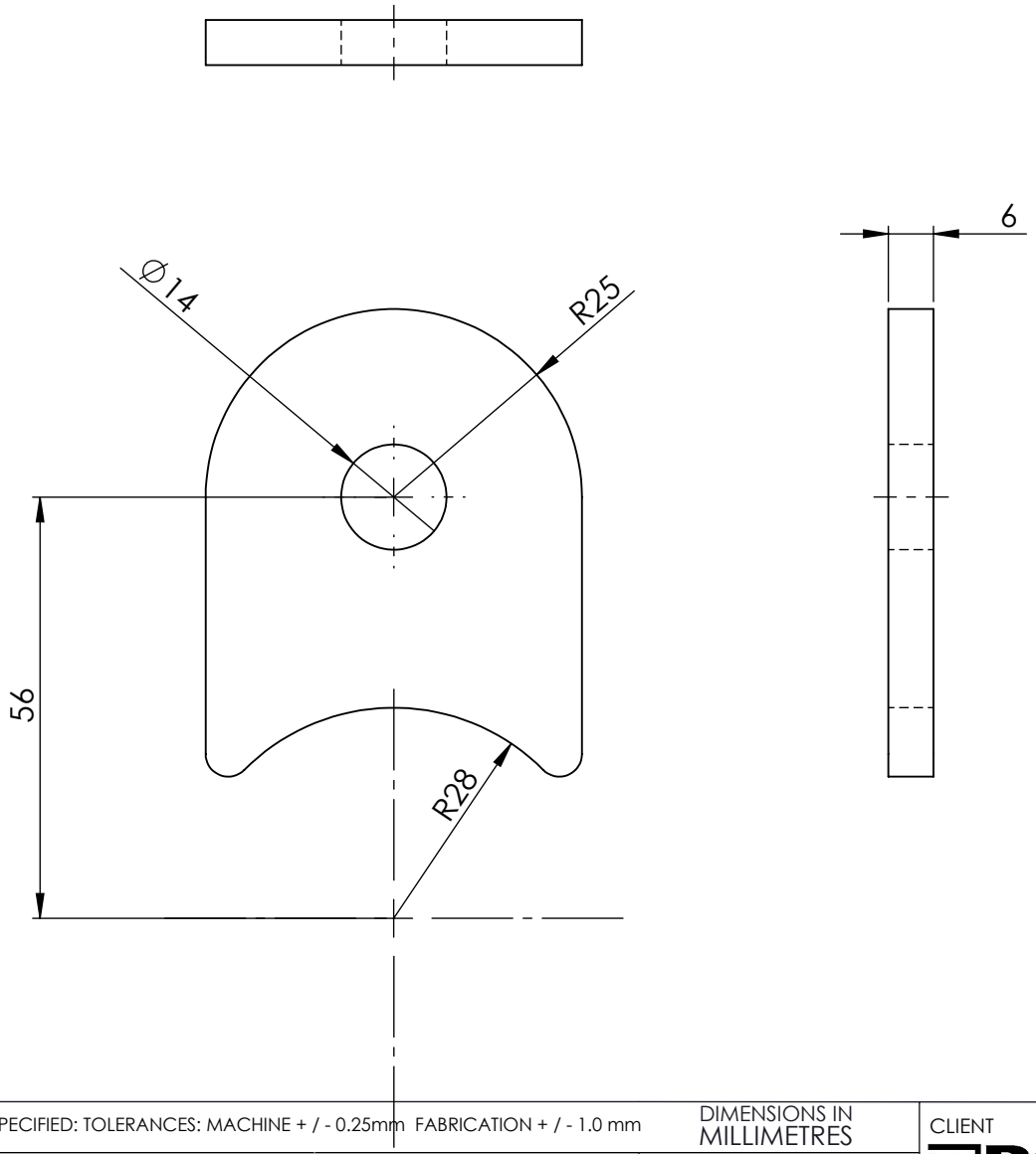

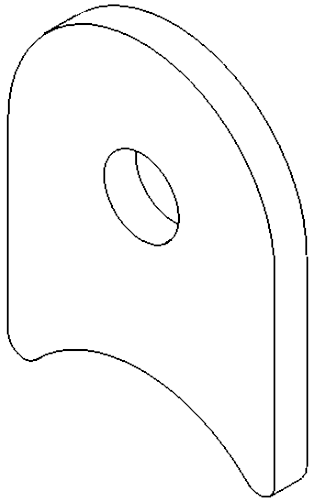

MATERIAL:- MS PLATE GRADE 250

UNLESS OTHERWISE SPECIFIED: TOLERANCES: MACHINE + / - 0.25mm FABRICATION + / - 1.0 mm

DIMENSIONS IN MILLIMETRES

THIS DRAWING IS THE PROPERTY OF MECHANICAL ENGINEERING & CAD SERVICES (MECS) Pty Ltd & MUST NOT BE MANUFACTURED FROM,COPIED OR TRANSMITTED TO A THIRD PARTY WITHOUT THE PRIOR APPROVAL FROM MECHANICAL ENGINEERING & CAD SERVICES (MECS) Pty Ltd

MECS
Mechanical Engineering & CAD Services
11 Campbell Place WAGGA NSW 2650
Ph: - 0409 985 816
Email: nick@mecservices.com.au

THIRD ANGLE PROJECTION

WEIGHT: 0 0 kg

CLIENT

RODDY ENGINEERING
14 Waratah St TUMUT NSW 2720
Ph: - 02 6947 4039
Email: roddyeng.com.au

TITLE:

HINGE SIDE PLATE

DWG NO.	3484-MU103-20-11			A4
DRAWN	N DE BRUYN	DATE 5/04/2024	SCALE:1:1	SHEET 1 OF 2

FART No.: 3484A6/03/20/11
DESCRIPTION: HINGE SIDE PLATE
MATERIAL: MS PLATE GRADE 250
THICKNESS: 6.0 MM
QTY: REFER TO PURCHASE ORDER