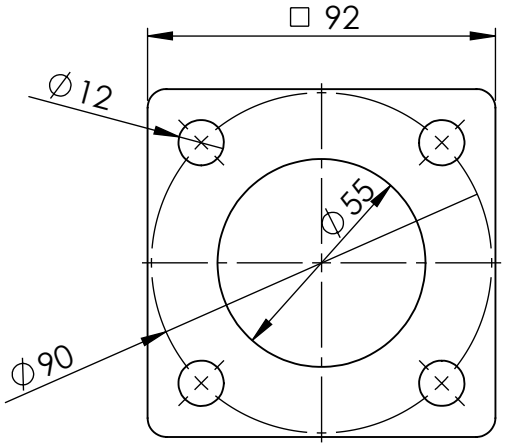

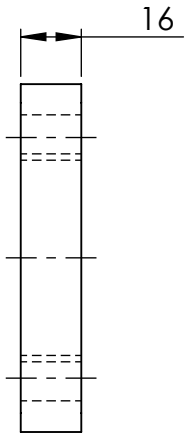

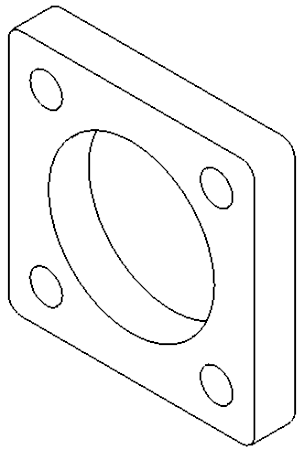

WATERJET CUT PROFILE

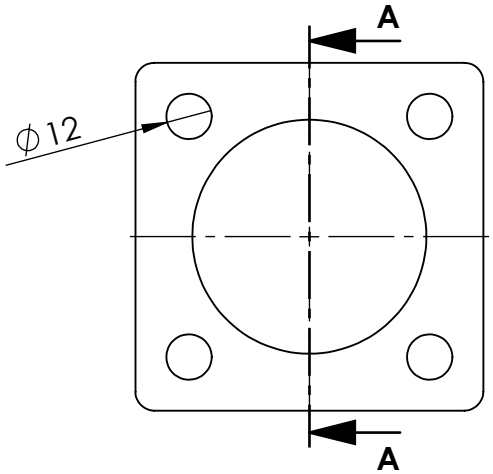

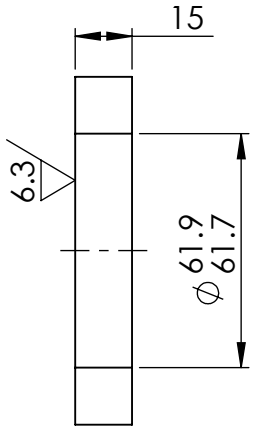

SECTION A-A

MATERIAL:- 316L STAINLESS STEEL

UNLESS OTHERWISE SPECIFIED: TOLERANCES: MACHINE + / - 0.25mm FABRICATION + / - 1.0 mm

DIMENSIONS IN MILLIMETRES

THIS DRAWING IS THE PROPERTY OF MECHANICAL ENGINEERING & CAD SERVICES (MECS) Pty Ltd & MUST NOT BE MANUFACTURED FROM,COPIED OR TRANSMITTED TO A THIRD PARTY WITHOUT THE PRIOR APPROVAL FROM MECHANICAL ENGINEERING & CAD SERVICES (MECS) Pty Ltd

MECS
Mechanical Engineering & CAD Services
11 Campbell Place WAGGA NSW 2650
Ph: - 0409 985 816
Email: nick@mecservices.com.au

THIRD ANGLE PROJECTION

WEIGHT: 11 kg

CLIENT

RODDY ENGINEERING
14 Waratah St TUMUT NSW 2720
Ph: - 02 6947 4039
Email: roddyeng.com.au

TITLE:

50NB x 92 SQUARE FLANGE

DWG NO.	3674-35-10			A4
DRAWN	N DE BRUYN	DATE 26/08/2024	SCALE:1:2	SHEET 1 OF 2
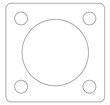
PART No.: 3674-35-15
DESCRIPTION: 150 SQUARE SQUARE FLANGE
MATERIAL: 316L (STAINLESS STEEL)
THICKNESS: 14
QTY.: REFER TO PURCHASE ORDER