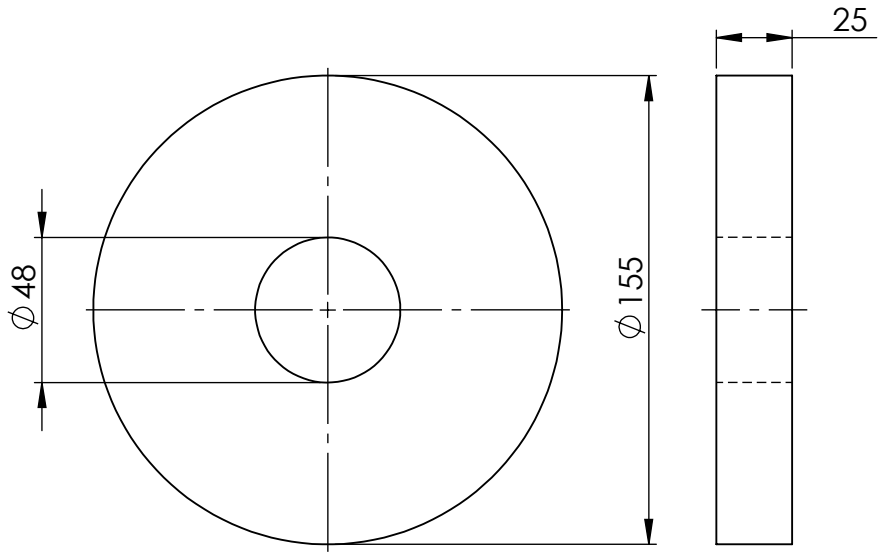

PROFILE CUT BLANK

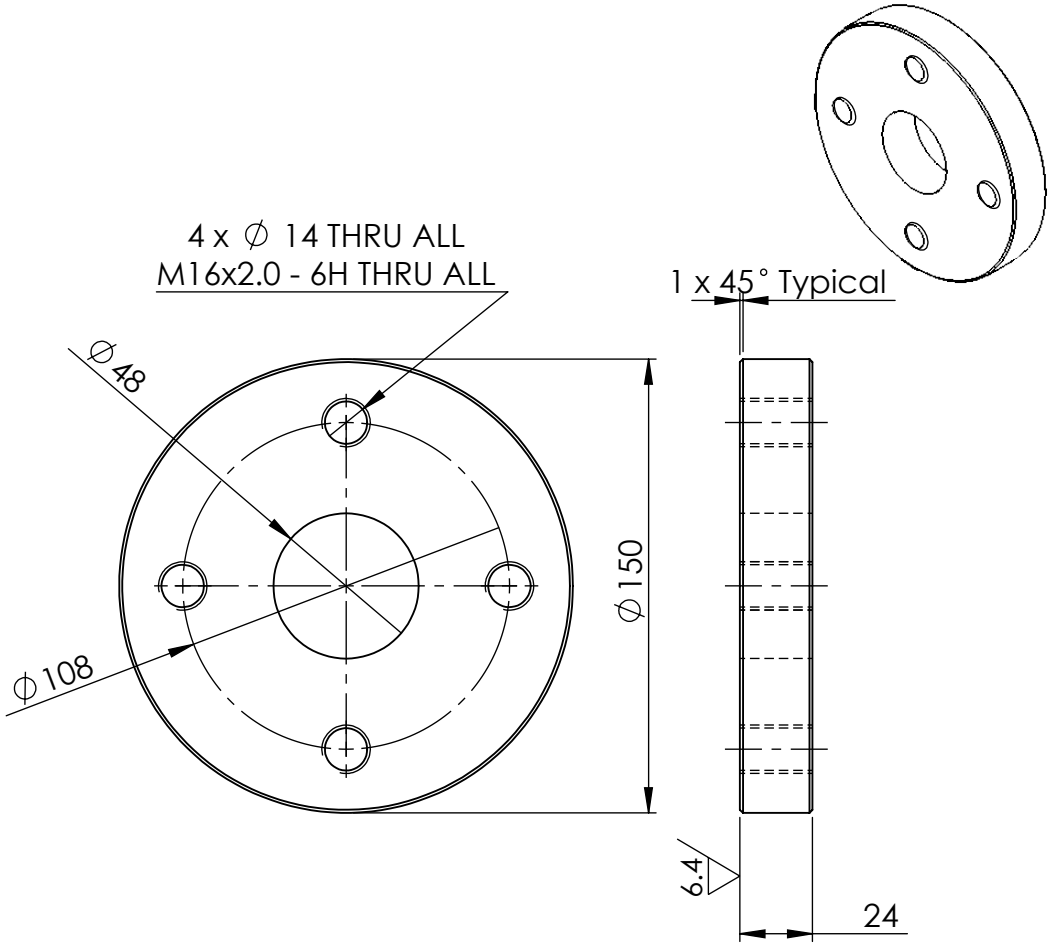

MACHINED FLANGE

MATERIAL:- 316L STAINLESS STEEL

UNLESS OTHERWISE SPECIFIED: TOLERANCES: MACHINE + / - 0.25mm FABRICATION + / - 1.0 mm

DIMENSIONS IN MILLIMETRES

THIS DRAWING IS THE PROPERTY OF MECHANICAL ENGINEERING & CAD SERVICES (MECS) Pty Ltd & MUST NOT BE MANUFACTURED FROM,COPIED OR TRANSMITTED TO A THIRD PARTY WITHOUT THE PRIOR APPROVAL FROM MECHANICAL ENGINEERING & CAD SERVICES (MECS) Pty Ltd

MECS
Mechanical Engineering & CAD Services
11 Campbell Place WAGGA NSW 2650
Ph: - 0409 985 816
Email: nick@mecservices.com.au

THIRD ANGLE PROJECTION

WEIGHT: 3 3 kg

CLIENT

RODDY ENGINEERING
14 Waratah St TUMUT NSW 2720
Ph: - 02 6947 4039
Email: roddyeng.com.au

TITLE: 150 OD x 108 PCD 316L S/S FLANGE

DWG NO. 3674-60-11 | A4

DRAWN N DE BRUYN | DATE 16/09/2024 | SCALE:1:2.5 | SHEET 1 OF 2
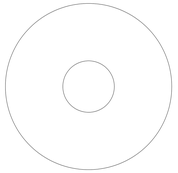
PART No.: 3674540-11
DESCRIPTION: 1 1/8 PCD 316L S/S FLANGE
MATERIAL: 316L STAINLESS STEEL
THICKNESS: 20
QTY: REFER TO PURCHASE ORDER