DIMENSIONS IN MILLIMETRES

ITEM	DRAWING No	DESCRIPTION	QTY.	MASS (kg)
1	3927-30-25	25 BMS - SPACER 16 DIA HOLE 57 LONG	1	0
2	3927-30-15	25 BMS - SPACER 16 DIA HOLE 67 LONG	3	0
3	3927-30-10	50x2 SHS - CLOSING SHS	1	4

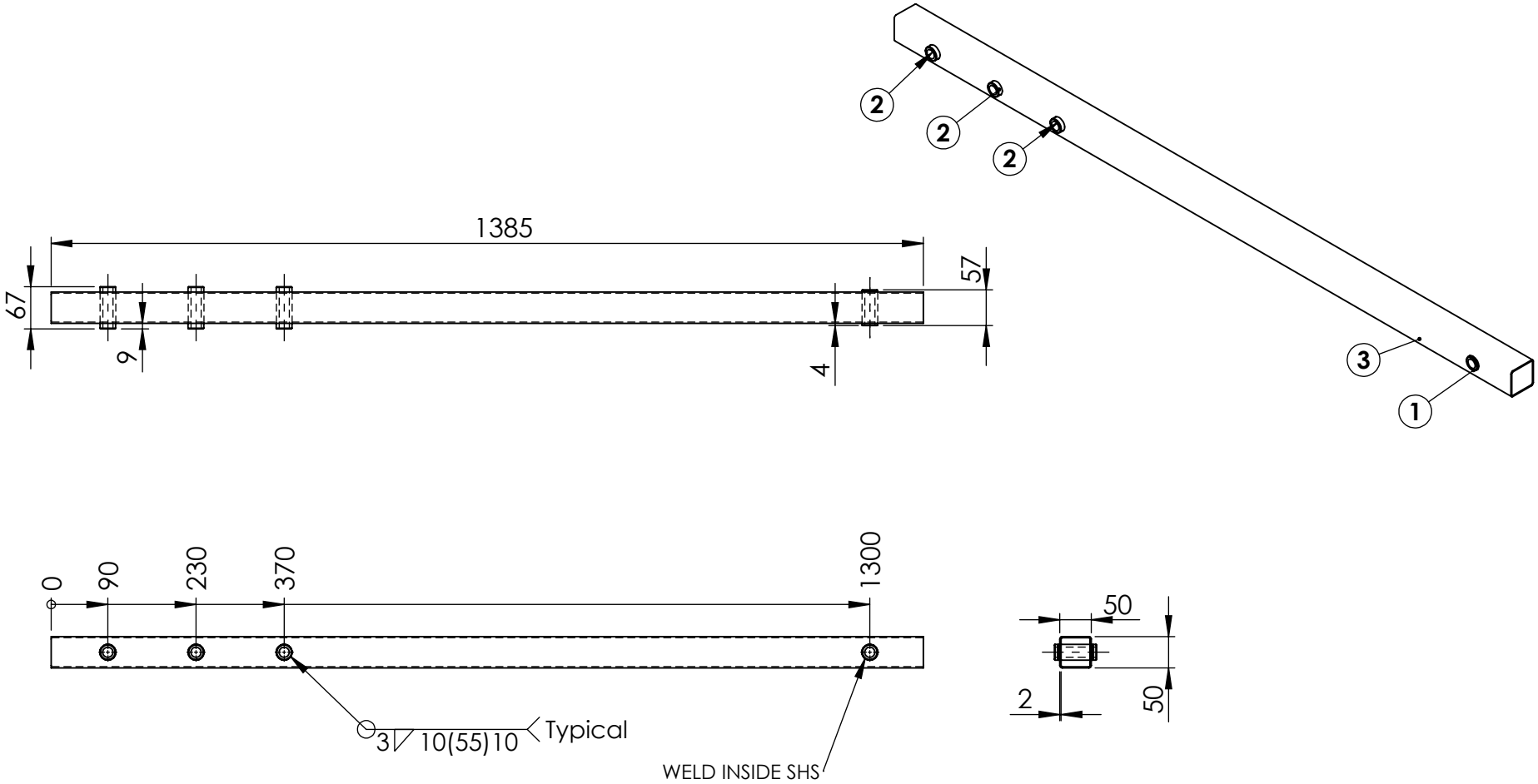

UNLESS OTHERWISE SPECIFIED: TOLERANCES: MACHINE + / - 0.25mm FABRICATION + / - 1.0 mm

THIS DRAWING IS THE PROPERTY OF MECHANICAL ENGINEERING & CAD SERVICES (MECS) Pty Ltd & MUST NOT BE MANUFACTURED FROM,COPIED OR TRANSMITTED TO A THIRD PARTY WITHOUT THE PRIOR APPROVAL FROM MECHANICAL ENGINEERING & CAD SERVICES (MECS) Pty Ltd

THIRD ANGLE PROJECTION

WEIGHT: 5 Kg

MECS
Mechanical Engineering & CAD Services
11 Campbell Place WAGGA NSW 2650
Ph: - 0409 985 816
Email: nick@mecservices.com.au

TITLE: CLAMPING SHS ASSEMBLIED

DWG NO. 3927-30 REV A4

DRAWN N DE BRUYN DATE 29/01/2026 SCALE:1:10 SHEET 1 OF 1