ITEM	DRAWING No	DESCRIPTION	QTY.	MASS (kg)
1	3927-40-25	UPPER ARM SPACER	1	0.28
2	3927-40-20	INTERNAL PIN SUPPORT PLATE	2	0.07
3	3927-40-15	PIN SUPPORT PLATE	6	0.05
4	3927-40-10	LOWER ARM 1 SIDE PLATE	2	0.88

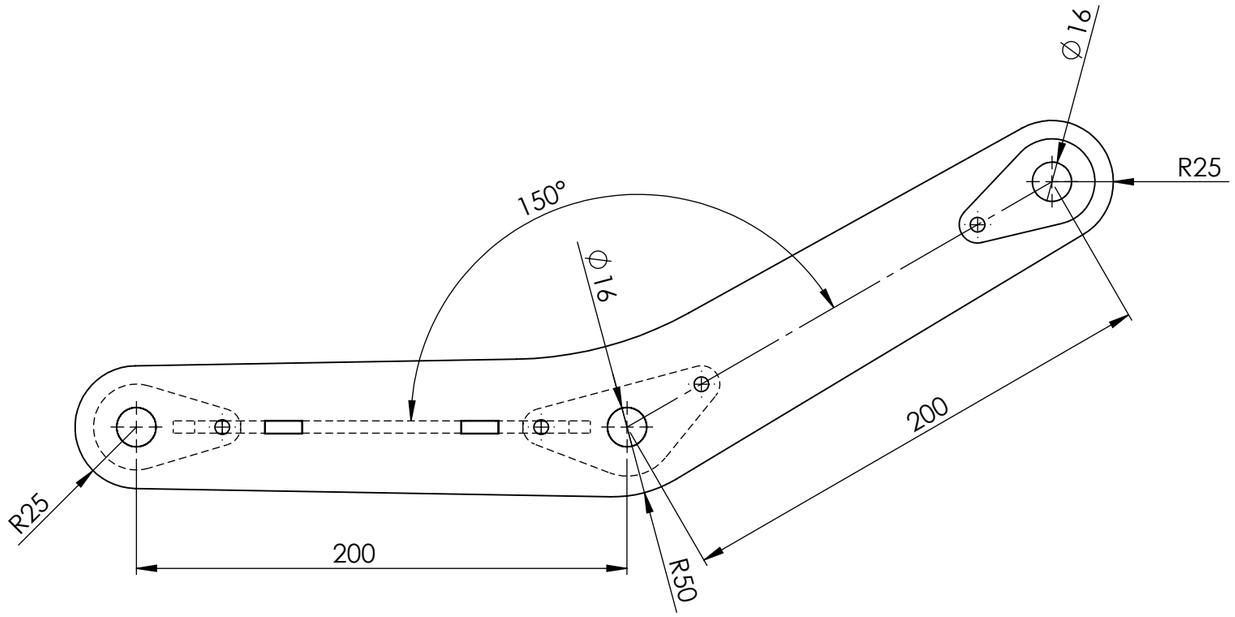

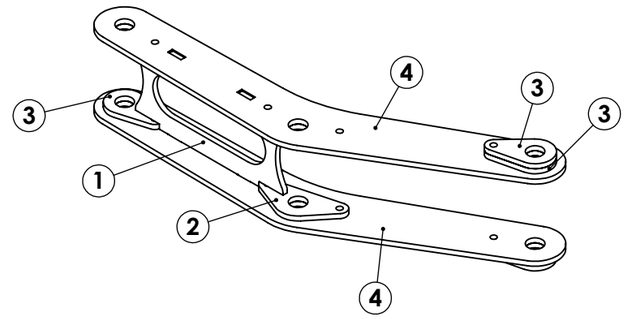

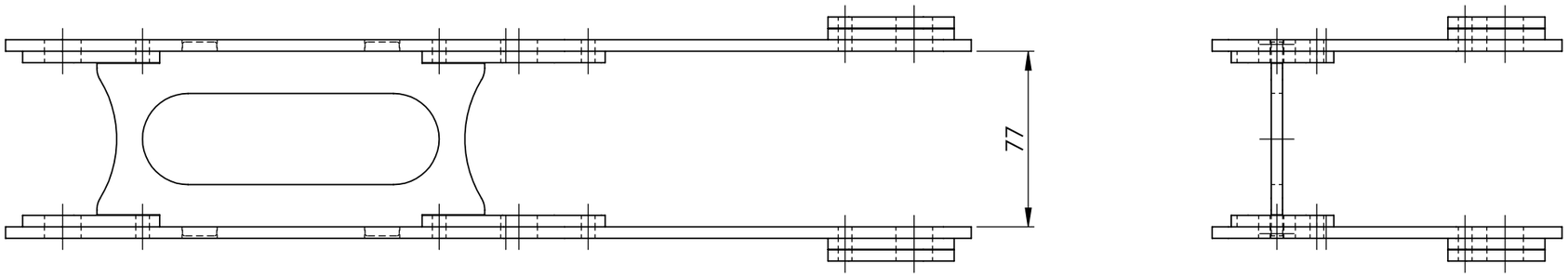

LOWER PIVOT ARM 1 WEIGHT - 2.48 kg

UNLESS OTHERWISE SPECIFIED: TOLERANCES: MACHINE + / - 0.25mm FABRICATION + / - 1.0 mm

THIS DRAWING IS THE PROPERTY OF MECHANICAL ENGINEERING & CAD SERVICES (MECS) Pty Ltd & MUST NOT BE MANUFACTURED FROM,COPIED OR TRANSMITTED TO A THIRD PARTY WITHOUT THE PRIOR APPROVAL FROM MECHANICAL ENGINEERING & CAD SERVICES (MECS) Pty Ltd

DIMENSIONS IN MILLIMETRES

THIRD ANGLE PROJECTION

MECS
Mechanical Engineering & CAD Services
11 Campbell Place WAGGA NSW 2650
Ph:- 0409 985 816
Email: nick@mecservices.com.au

TITLE: LOWER PIVOT ARM 1

DWG NO. 3927-40 REV A3

DRAWN N DE BRUYN DATE 29/01/2026 SCALE 1:2.5 SHEET 1 OF 1