DIMENSIONS IN MILLIMETRES

ITEM NO.	MATERIAL	METAL THICKNESS	MASS (kg)
1	MS PLATE GRADE 250	5	0.9

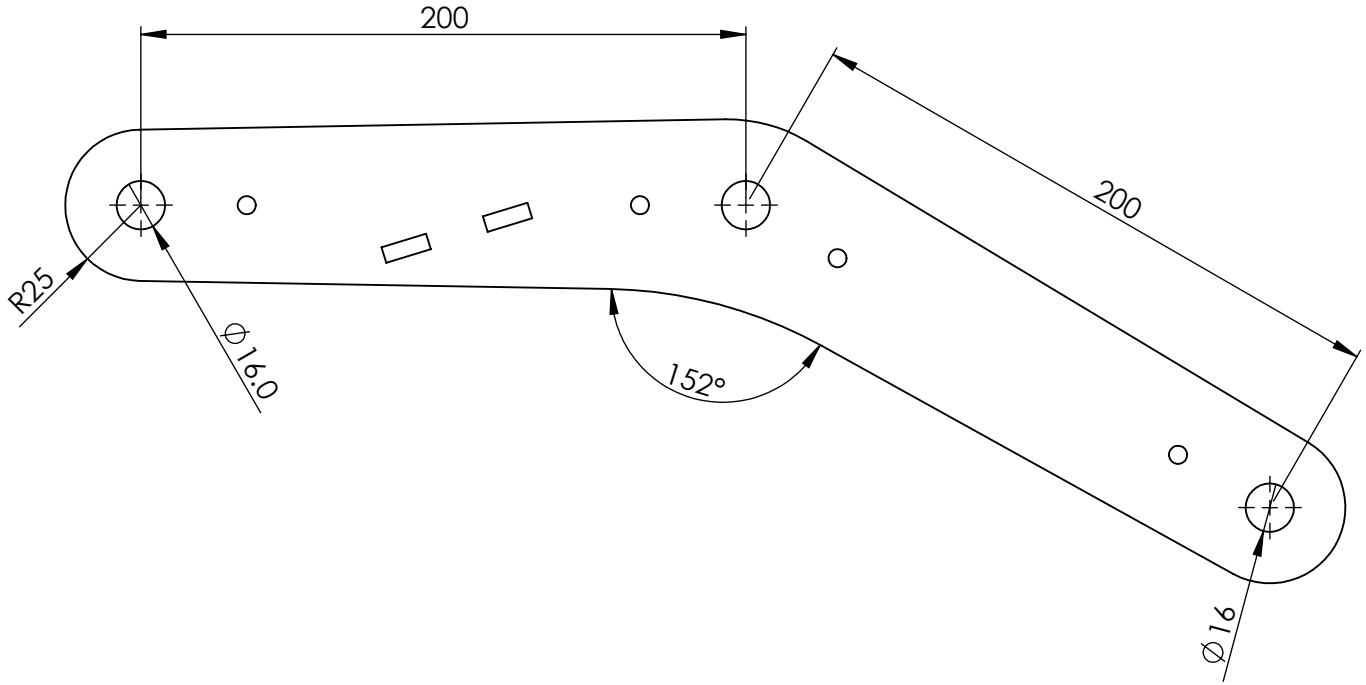

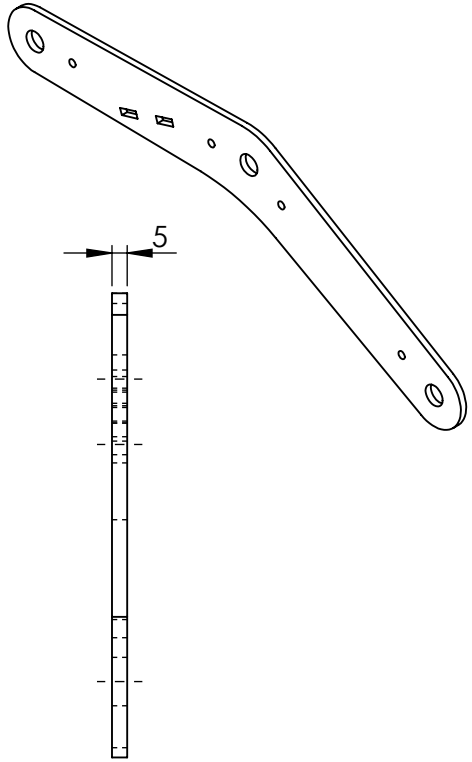

MATERIAL:- MS PLATE GRADE 250

UNLESS OTHERWISE SPECIFIED: TOLERANCES: MACHINE + / - 0.25mm FABRICATION + / - 1.0 mm

THIS DRAWING IS THE PROPERTY OF MECHANICAL ENGINEERING & CAD SERVICES (MECS) Pty Ltd & MUST NOT BE MANUFACTURED FROM,COPIED OR TRANSMITTED TO A THIRD PARTY WITHOUT THE PRIOR APPROVAL FROM MECHANICALENGINEERING & CAD SERVICES (MECS) Pty Ltd

THIRD ANGLE PROJECTION

WEIGHT: 0.9 kg

MECS
Mechanical Engineering & CAD Services
11 Campbell Place WAGGA NSW 2650
Ph: - 0409 985 816
Email: mecs1@bigpond.com

TITLE:

LOWER ARM 2 SIDE PLATE

DWG NO. 3927-45-10 | A4

DRAWN N DE BRUYN | DATE 29/01/2026 | SCALE:1:2.5 | SHEET 1 OF 2