ITEM	DRAWING No	DESCRIPTION	QTY.	MASS (kg)
1	3927-45-20	LOWER ARM SPACER 2	1	0.19
2	3927-45-10	LOWER ARM 2 SIDE PLATE	2	0.88
3	3927-40-20	INTERNAL PIN SUPPORT PLATE	2	0.07
4	3927-40-15	PIN SUPPORT PLATE	6	0.05

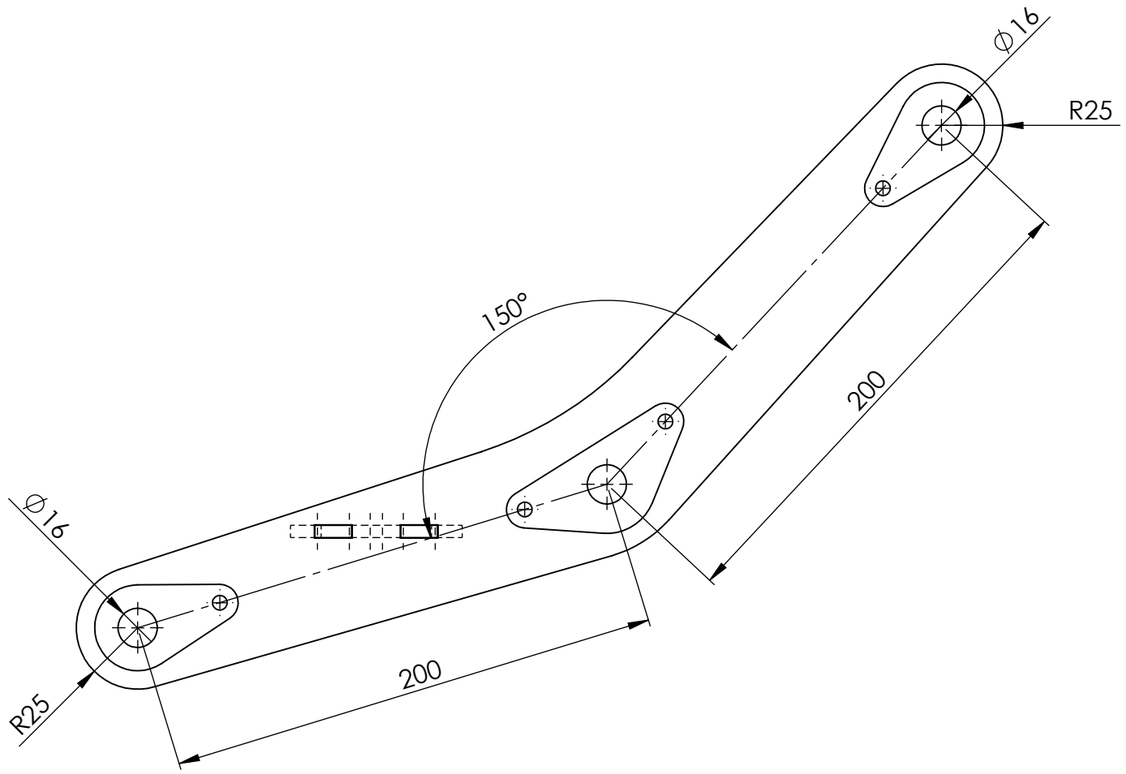

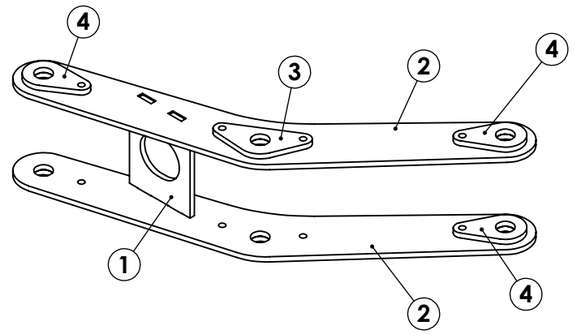

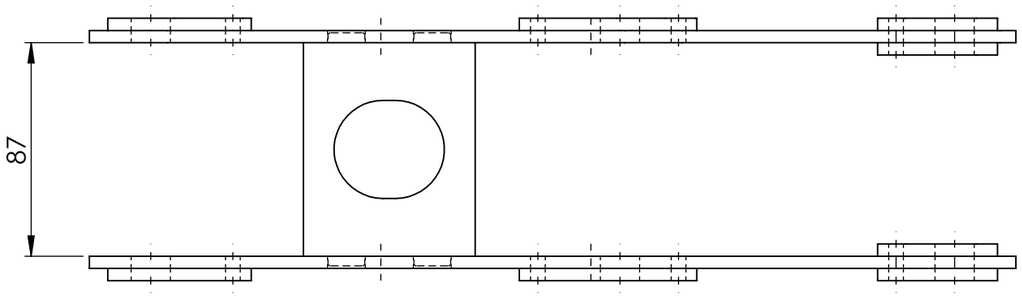

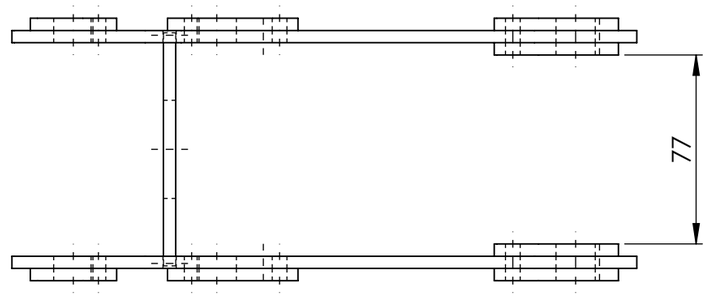

LOWER ARM TYPE 2 WEIGHT - 2.39 kg

UNLESS OTHERWISE SPECIFIED: TOLERANCES: MACHINE + / - 0.25mm FABRICATION + / - 1.0 mm

THIS DRAWING IS THE PROPERTY OF MECHANICAL ENGINEERING & CAD SERVICES (MECS) Pty Ltd & MUST NOT BE MANUFACTURED FROM,COPIED OR TRANSMITTED TO A THIRD PARTY WITHOUT THE PRIOR APPROVAL FROM MECHANICAL ENGINEERING & CAD SERVICES (MECS) Pty Ltd

DIMENSIONS IN MILLIMETRES

THIRD ANGLE PROJECTION

MECS
Mechanical Engineering & CAD Services
11 Campbell Place WAGGA NSW 2650
Ph:- 0409 985 816
Email: nick@mecservices.com.au

TITLE: LOWER ARM TYPE 2

DWG NO. 3927-45 REV A3

DRAWN N DE BRUYN DATE 19/02/2026 SCALE 1:2.5 SHEET 1 OF 1