ITEM	DRAWING No	DESCRIPTION	QTY.	MASS (kg)
1	OEM-M8-NS-HD	M8x1.25 NUTSERT LARGE FLANGE HEAD 0.7-3.8mm GRIP	6	0.01
2	3947-25	ROOF FRAME ASSEMBLIED	1	483
3	3947-20	FLOOR FRAMING ASSEMBLY	1	424
4	3947-15-30	50x5 FB DOOR HEAD JAMB	1	2
5	3947-15-25	50x2.5 DURAGAL EA SHUTTER MOUNT	1	2
6	3947-15-20	100 x 5 SHS DURAGAL CORNER	4	18
7	3947-15-15	75x3 SHS WINDOW FRAME SIDE	9	8

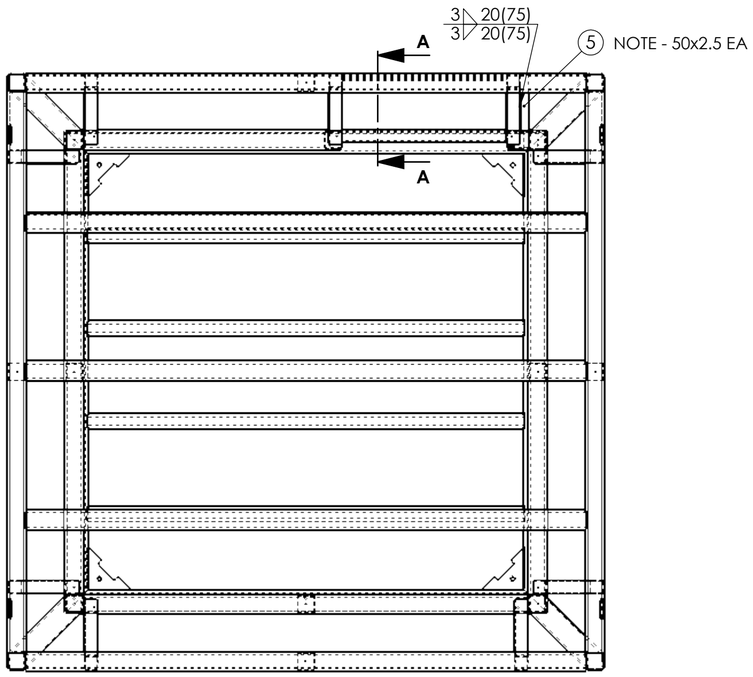

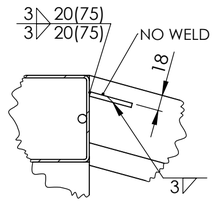

DETAIL B
SCALE 1 : 5

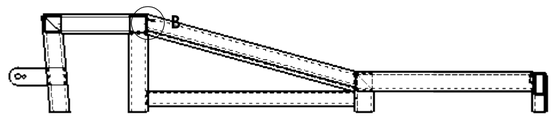

SECTION A-A

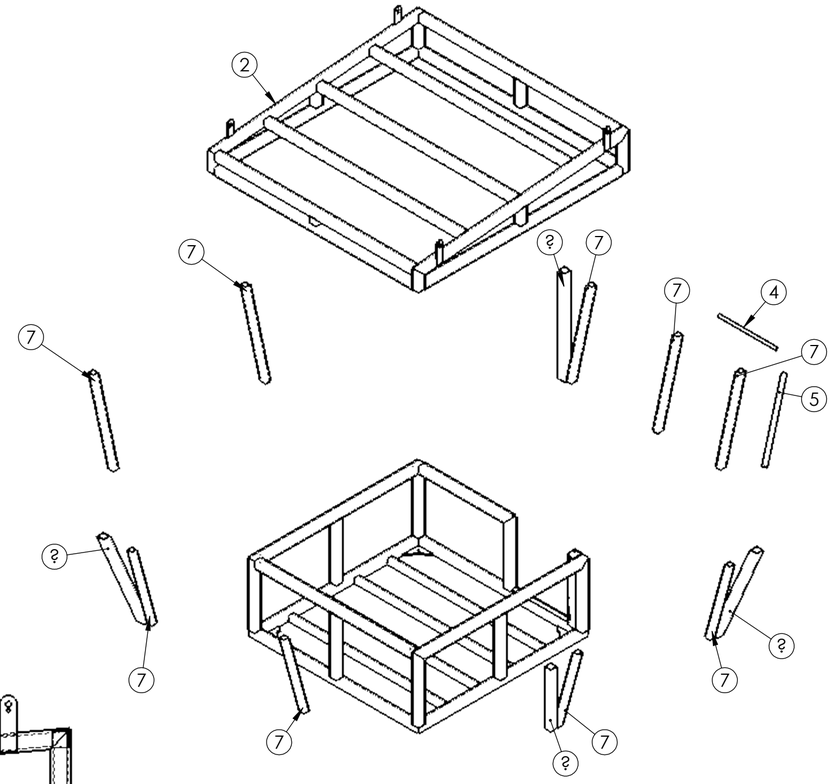

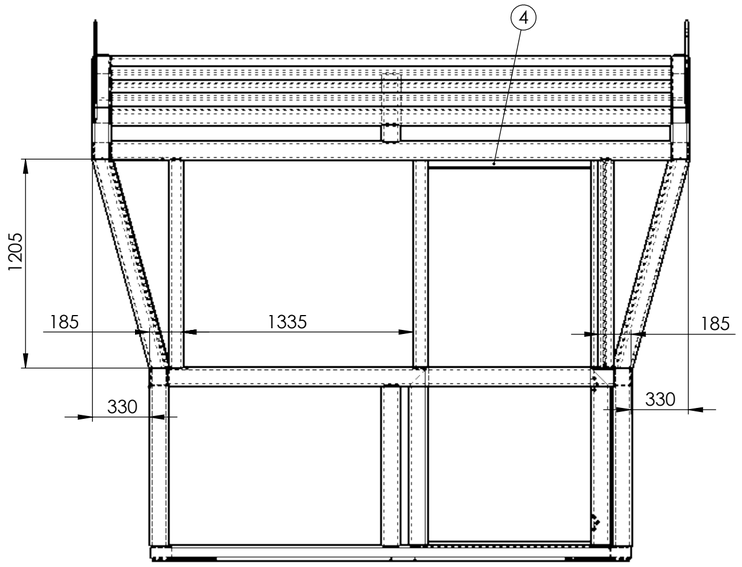

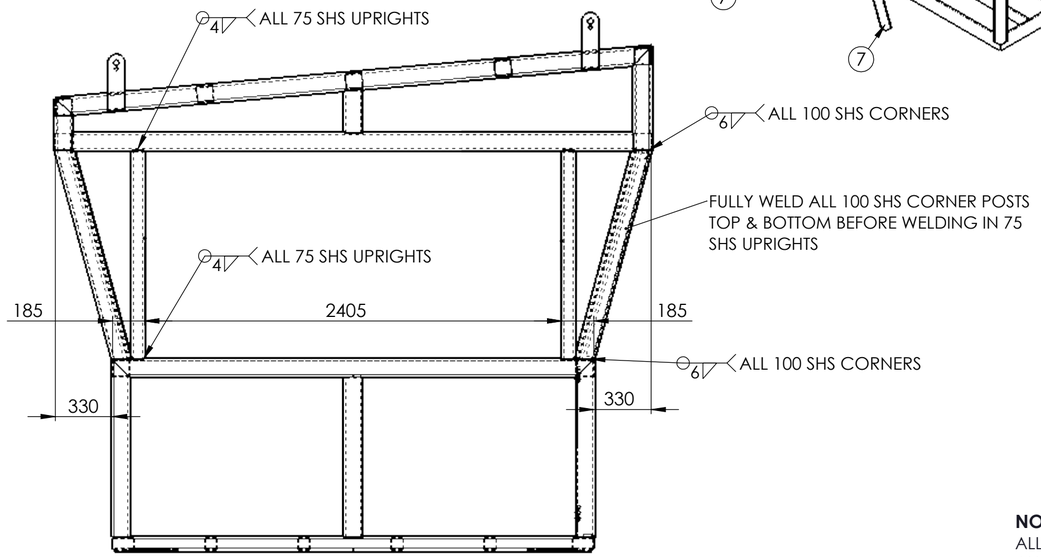

NOTES - UNO
ALL FILLET WELDS SHALL BE 6MM CONTINUOUS
ALL BUTT WELDS SHALL BE FULL PENETRATION
ALL WELDS, CUTS AND HOLES SHALL BE TREATED
WITH 2 COATS OF ZINC RICH PRIMER

FIRE CABIN FRAME ASSEMBLY WEIGHT - 1057 kg

UNLESS OTHERWISE SPECIFIED: TOLERANCES: MACHINE + / - 0.25mm FABRICATION + / - 1.0 mm

DIMENSIONS IN MILLIMETRES

THIS DRAWING IS THE PROPERTY OF MECHANICAL ENGINEERING & CAD SERVICES (MECS) Pty Ltd & MUST NOT BE MANUFACTURED FROM,COPIED OR TRANSMITTED TO A THIRD PARTY WITHOUT THE PRIOR APPROVAL FROM MECHANICAL ENGINEERING & CAD SERVICES (MECS) Pty Ltd

MECS
Mechanical Engineering & CAD Services
11 Campbell Place WAGGA NSW 2650
Ph: - 0409 985 816
Email: nick@mecservices.com.au

THIRD ANGLE PROJECTION

WEIGHT: kg

CLIENT
RODDY ENGINEERING
14 Waratah St TUMUT NSW 2720
Ph: - 02 6947 4039
Email: roddyeng.com.au

TITLE: FIRE CABIN FRAME ASSEMBLY

DWG NO. 3947-15 REV A2

DRAWN N DE BRUYN DATE 24/04/2025 SCALE:1:25 SHEET 1 OF 1