ITEM NO.	DESCRIPTION	LENGTH	QTY	MASS (kg)
1	100 x 3 DURAGAL SHS	3235	3	28.78
2	100 x 3 DURAGAL SHS	254	2	2.22
3	100 x 3 DURAGAL SHS	392	1	3.49
4	100 x 3 DURAGAL SHS	99	1	0.89
5	100 x 5 DURAGAL SHS	299	1	3.57
6	100 x 5 DURAGAL SHS	3448	1	46.29
7	100 x 5 DURAGAL SHS	3448	1	46.29
8	100 x 5 DURAGAL SHS	600	1	7.69
9	100 x 5 DURAGAL SHS	3235	5	45.67
10	100 x 5 DURAGAL SHS	299	1	3.57
11	100 x 5 DURAGAL SHS	600	1	7.69
12	100 x 3 DURAGAL SHS	3235	1	28.78

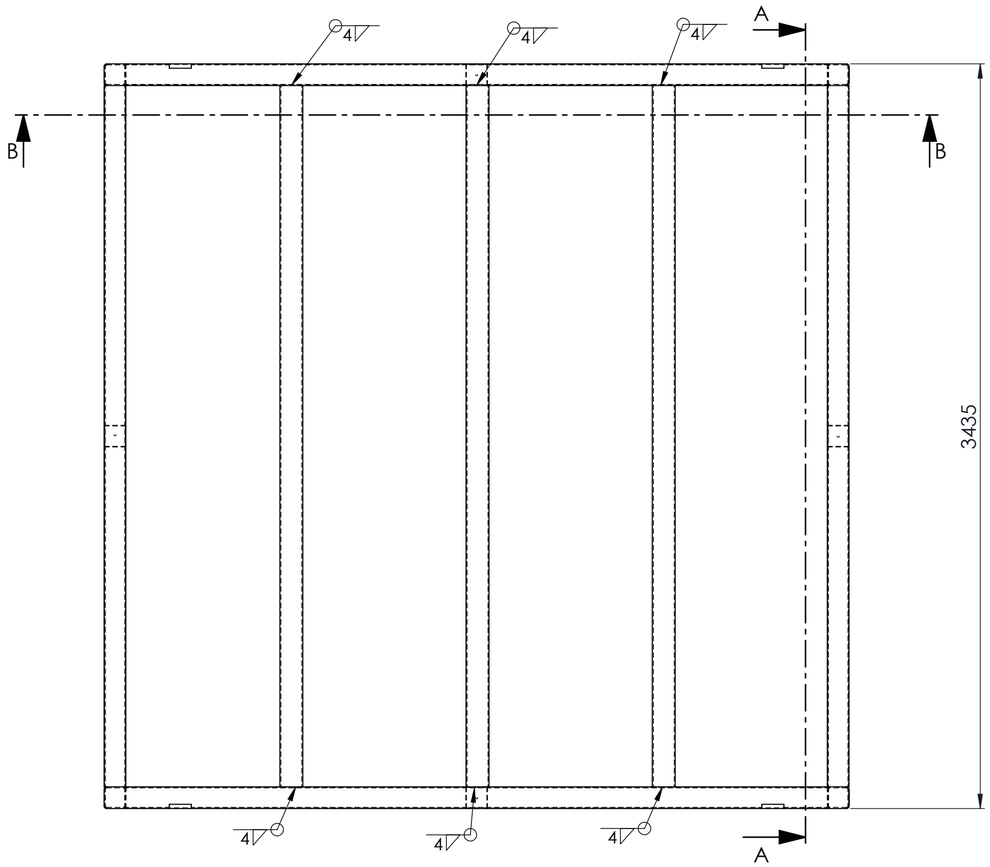

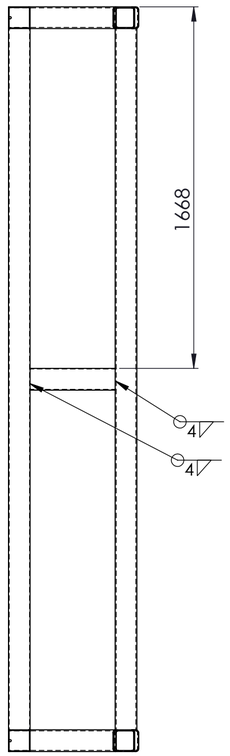

SECTION A-A

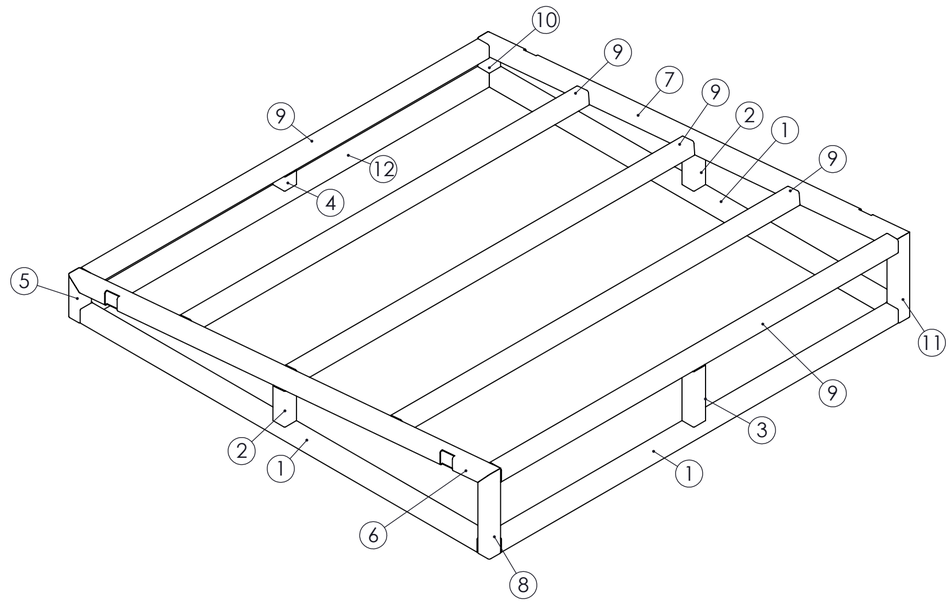

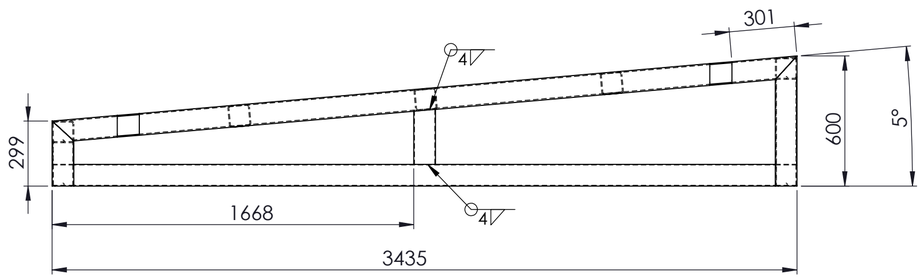

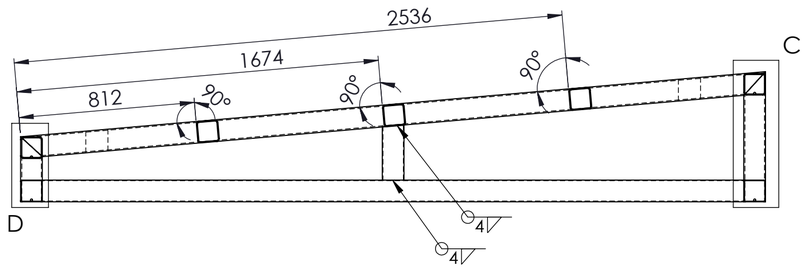

SECTION B-B

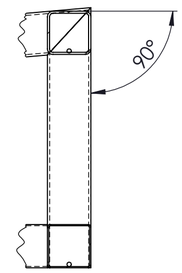

DETAIL C
SCALE 1 : 10

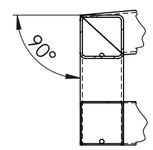

DETAIL D
SCALE 1 : 10

NOTES - UNO

ALL FILLET WELDS SHALL BE 6MM CONTINUOUS
ALL BUTT WELDS SHALL BE FULL PENETRATION
ALL WELDS, CUTS AND HOLES SHALL BE TREATED WITH 2 COATS OF ZINC RICH PRIMER

ROOF FRAME WEIGHT - 467.40 kg

UNLESS OTHERWISE SPECIFIED: TOLERANCES: MACHINE + / - 0.25mm FABRICATION + / - 1.0 mm

DIMENSIONS IN MILLIMETRES

THIS DRAWING IS THE PROPERTY OF MECHANICAL ENGINEERING & CAD SERVICES (MECS) Pty Ltd & MUST NOT BE MANUFACTURED FROM,COPIED OR TRANSMITTED TO A THIRD PARTY WITHOUT THE PRIOR APPROVAL FROM MECHANICAL ENGINEERING & CAD SERVICES (MECS) Pty Ltd

MECS
Mechanical Engineering & CAD Services
11 Campbell Place WAGGA NSW 2650
Ph: - 0409 985 816
Email: nick@mecservices.com.au

THIRD ANGLE PROJECTION

CLIENT
RODDY ENGINEERING
14 Waratah St TUMUT NSW 2720
Ph: - 02 6947 4039
Email: roddyeng.com.au

TITLE: ROOF FRAME

DWG NO. 3947-25-11 REV A2

DRAWN N DE BRUYN DATE 15/04/2025 SCALE:1:20 SHEET 1 OF 4

DIMENSIONS IN MILLIMETRES

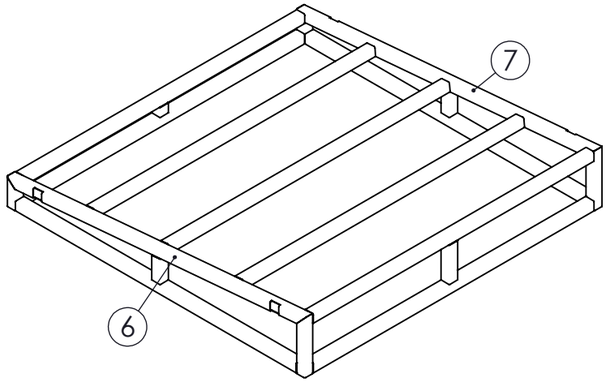

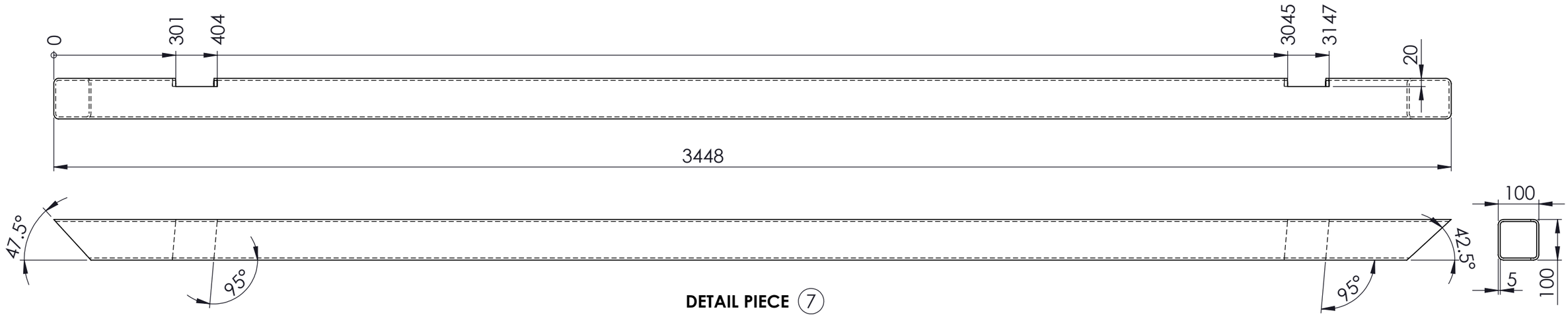

DETAIL PIECE (7)

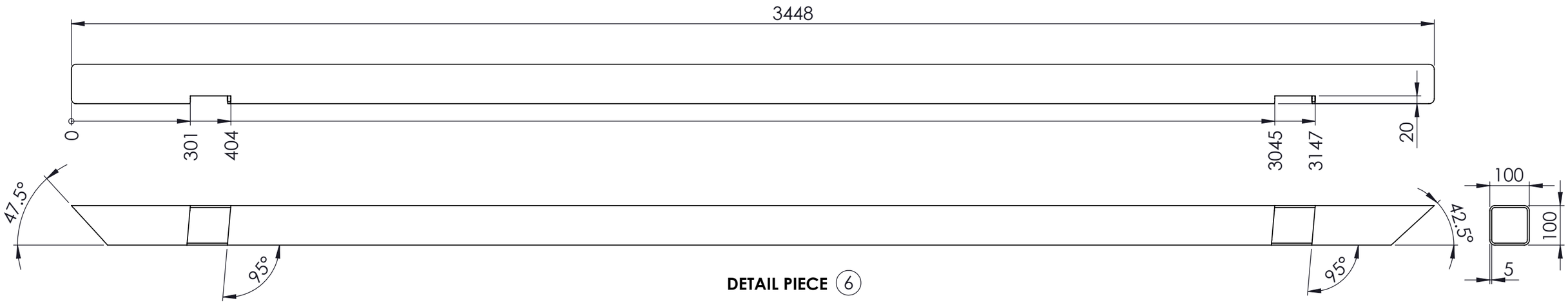

DETAIL PIECE (6)

UNLESS OTHERWISE SPECIFIED: TOLERANCES: MACHINE + / - 0.25mm FABRICATION + / - 1.0 mm

DIMENSIONS IN MILLIMETRES

THIS DRAWING IS THE PROPERTY OF MECHANICAL ENGINEERING & CAD SERVICES (MECS) Pty Ltd & MUST NOT BE MANUFACTURED FROM,COPIED OR TRANSMITTED TO A THIRD PARTY WITHOUT THE PRIOR APPROVAL FROM MECHANICAL ENGINEERING & CAD SERVICES (MECS) Pty Ltd

MECS
Mechanical Engineering & CAD Services
11 Campbell Place WAGGA NSW 2650
Ph: - 0409 985 816
Email: nick@mecservices.com.au

THIRD ANGLE PROJECTION

CLIENT

RODDY ENGINEERING

14 Waratah St TUMUT NSW 2720
Ph: - 02 6947 4039
Email: roddyeng.com.au

TITLE: ROOF FRAME

DWG NO. 3947-25-11		REV	A3
DRAWN N DE BRUYN	DATE 15/04/2025	SCALE:1:20	SHEET 2 OF 4

DIMENSIONS IN MILLIMETRES

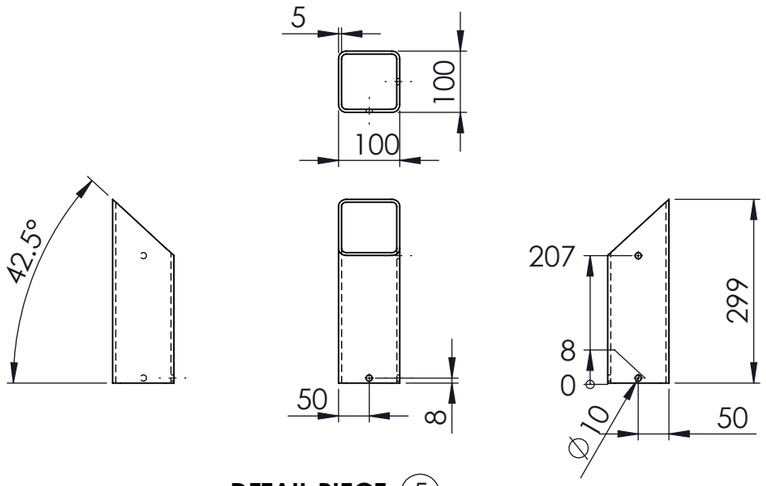

DETAIL PIECE (5)

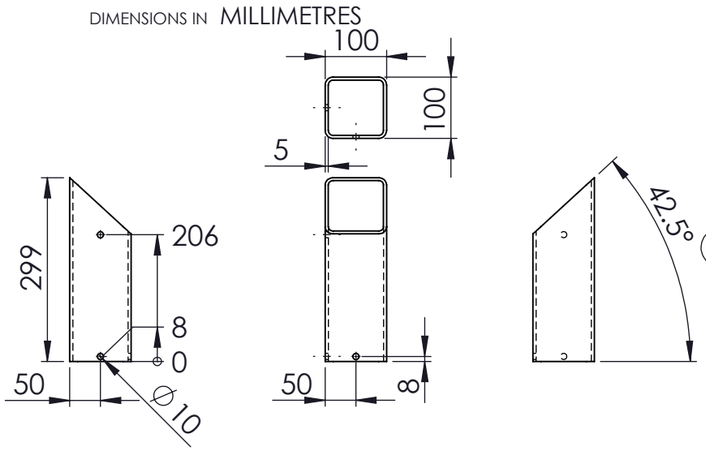

DETAIL PIECE (10)

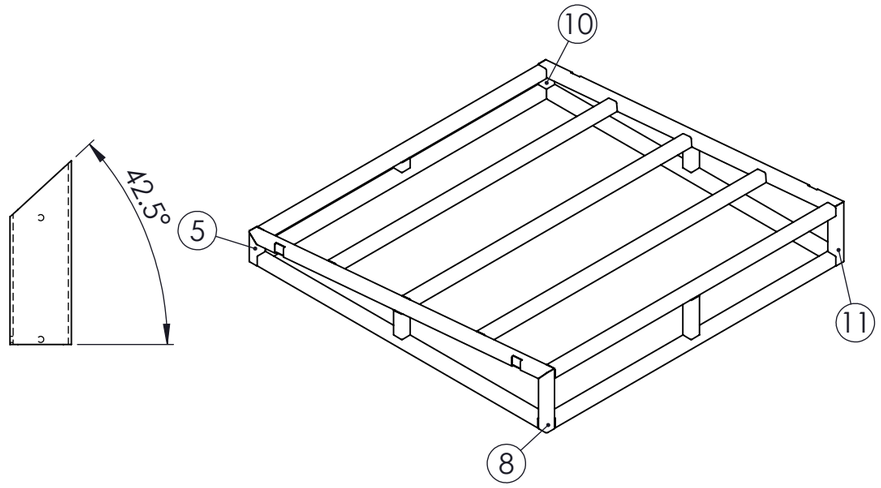

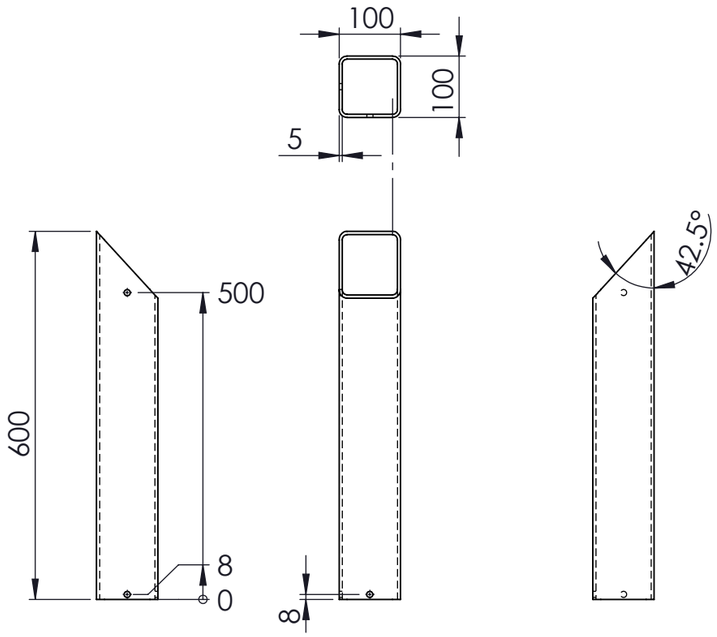

DETAIL PIECE (8)

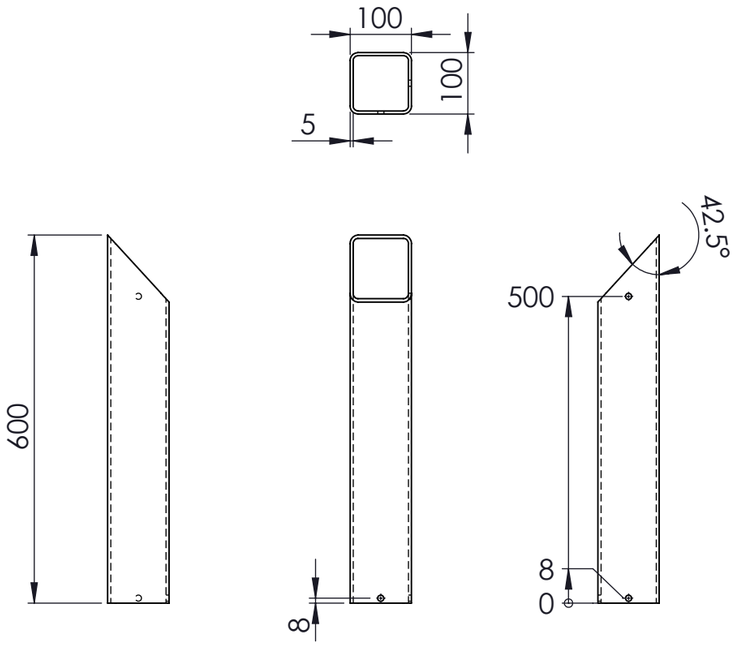

DETAIL PIECE (11)

UNLESS OTHERWISE SPECIFIED: TOLERANCES: MACHINE + / - 0.25mm FABRICATION + / - 1.0 mm

DIMENSIONS IN MILLIMETRES

THIS DRAWING IS THE PROPERTY OF MECHANICAL ENGINEERING & CAD SERVICES (MECS) Pty Ltd & MUST NOT BE MANUFACTURED FROM,COPIED OR TRANSMITTED TO A THIRD PARTY WITHOUT THE PRIOR APPROVAL FROM MECHANICAL ENGINEERING & CAD SERVICES (MECS) Pty Ltd

MECS
Mechanical Engineering & CAD Services
11 Campbell Place WAGGA NSW 2650
Ph: - 0409 985 816
Email: nick@mecservices.com.au

THIRD ANGLE PROJECTION

CLIENT
RODDY ENGINEERING
14 Waratah St TUMUT NSW 2720
Ph: - 02 6947 4039
Email: roddyeng.com.au

TITLE: ROOF FRAME

DWG NO. 3947-25-11 | REV | A3

DRAWN N DE BRUYN | DATE 15/04/2025 | SCALE:1:20 | SHEET 3 OF 4

DIMENSIONS IN MILLIMETRES

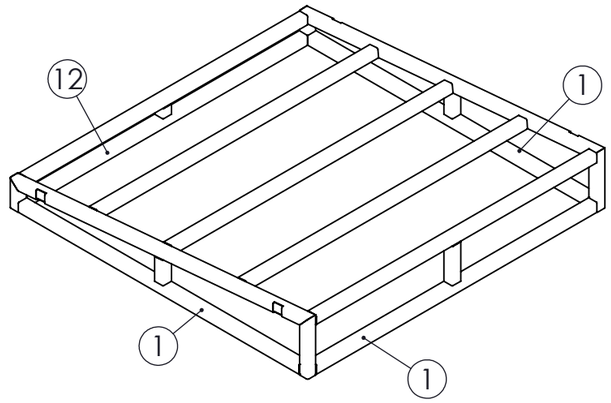

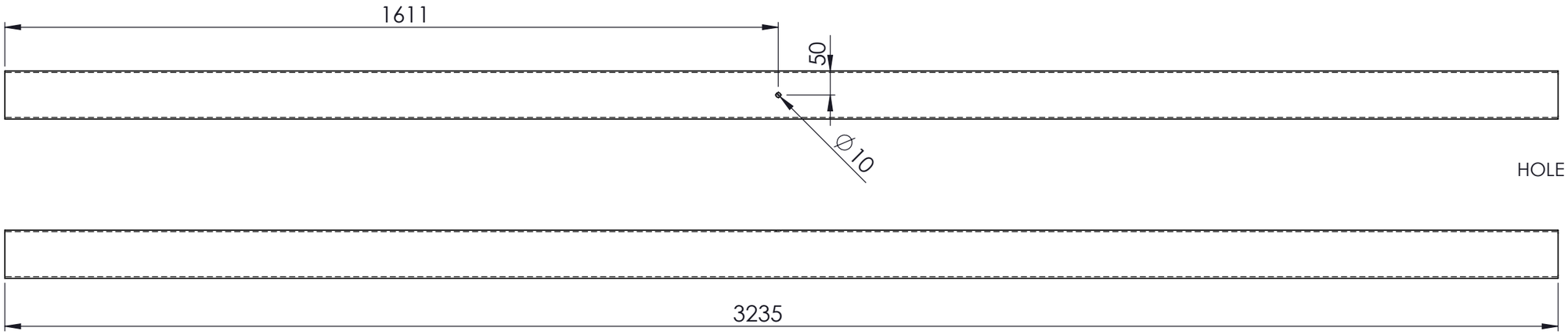

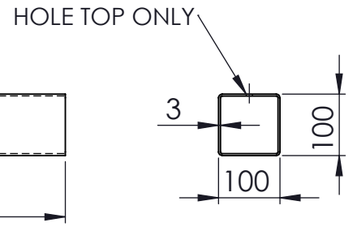

DETAIL PIECE 12 & 1

UNLESS OTHERWISE SPECIFIED: TOLERANCES: MACHINE + / - 0.25mm FABRICATION + / - 1.0 mm

DIMENSIONS IN MILLIMETRES

THIS DRAWING IS THE PROPERTY OF MECHANICAL ENGINEERING & CAD SERVICES (MECS) Pty Ltd & MUST NOT BE MANUFACTURED FROM,COPIED OR TRANSMITTED TO A THIRD PARTY WITHOUT THE PRIOR APPROVAL FROM MECHANICAL ENGINEERING & CAD SERVICES (MECS) Pty Ltd

MECS
Mechanical Engineering & CAD Services
11 Campbell Place WAGGA NSW 2650
Ph: - 0409 985 816
Email: nick@mecservices.com.au

THIRD ANGLE PROJECTION

CLIENT

RODDY ENGINEERING
14 Waratah St TUMUT NSW 2720
Ph: - 02 6947 4039
Email: roddyeng.com.au

TITLE: ROOF FRAME

DWG NO. 3947-25-11 REV A3

DRAWN N DE BRUYN DATE 15/04/2025 SCALE:1:20 SHEET 4 OF 4