REVISIONS			
REV.	DESCRIPTION	DATE	APPROVED
A	DOOR SKIN WAS ACM 4mm THICK	4/06/2025	TC

DIMENSIONS IN MILLIMETRES

ITEM	DRAWING No	DESCRIPTION	QTY.	MASS (kg)
1	OEM-RAVEN-RP3-920	RAVEN RP3 AUTOMATIC DOOR BOTTOM SEAL 920 LONG	1	0.43
2	OEM-M8-NS-HD	M8x1.25 NUTSERT LARGE FLANGE HEAD 0.7-3.8mm GRIP	6	0.01
3	OEM-LOCK-CYL	LOCK CYLINDER	1	0.02
4	OEM-DSP	DOOR STRIKE PLATE	1	
5	OEM-5782-SBEL	MORTICE SHORT BACKSET ESCAPE LOCK	1	0.09
6	OEM-4904-166-DH	DOOR HANDLE 4904 WITH LEVER 166 & TURN KNOB	1	0.30
7	OEM-4801-166-DH	DOOR HANDLE 4801 WITH LEVER 166	1	0.68
8	3947-55-54-12	0.55 BT PALE EUCLYPT BOTTOM WINDOW FLASHING	1	0.33
9	3947-55-50-10	0.55 BT PALE EUCAYLPT DOOR SIDE CAPPING	2	0.15
10	3947-50-11	XFLAM FLAT PANEL	1	12.26
11	3947-30-45	0.55 BT PALE EUCALYPT DOOR HANDLE BACKING	1	0.18
12	3947-30-40	DOOR STRIKER PACKER	1	0.41
13	3947-30-30	25 x 25 ALUMINUM TEE BAR	1	0.16
14	3947-30-25	40x20x1.6 T BAR INTERNAL DOOR FLASHING	1	0.81
15	3947-30-23	0.42 MINI ORB COLORBOND- PALE EUCALYPT	1	0.59
16	3947-30-22	0.42 MINI ORB COLORBOND- PALE EUCALYPT	1	2.83
17	3947-30-15	WINDOW FIXED 1160 x 655	1	12.50
18	3947-30-10	75x2.5 SHS DOOR FRAME	1	37.15
19		DOUBLE BUTT BALL HINGE BOLTED RIGHT	2	0.38
20		M8 FLAT WASHER ZP	12	0.00
21		M8x1.25 x 30 HEX BOLT Gr 8.8 ZP	12	0.0

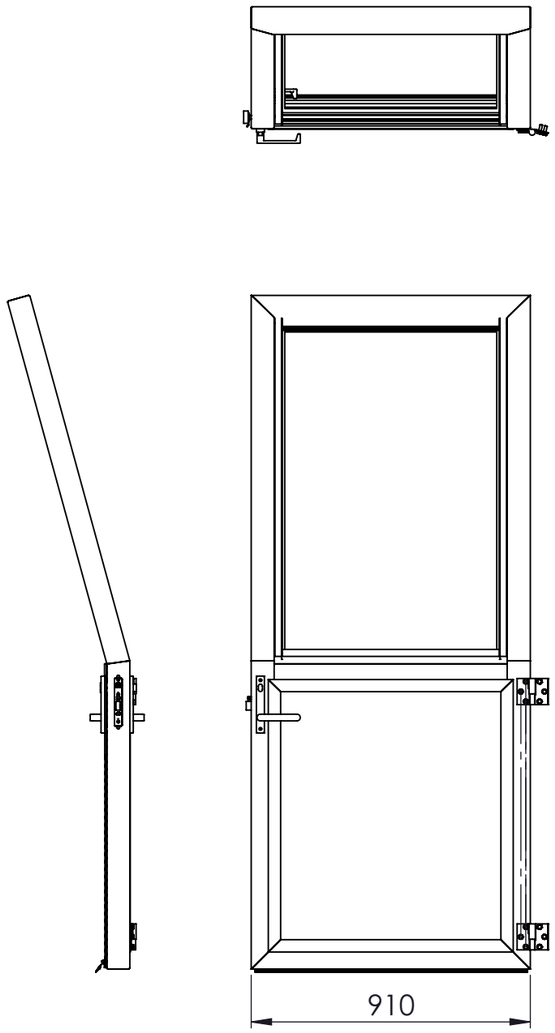

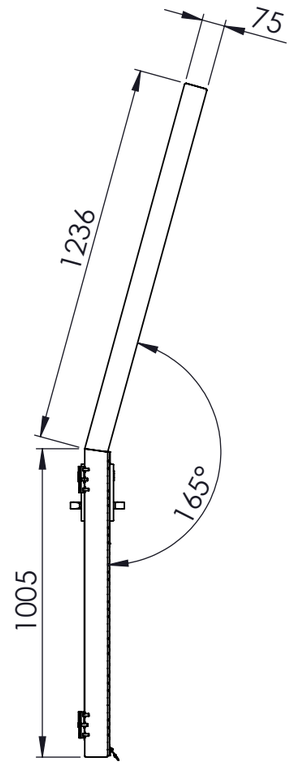

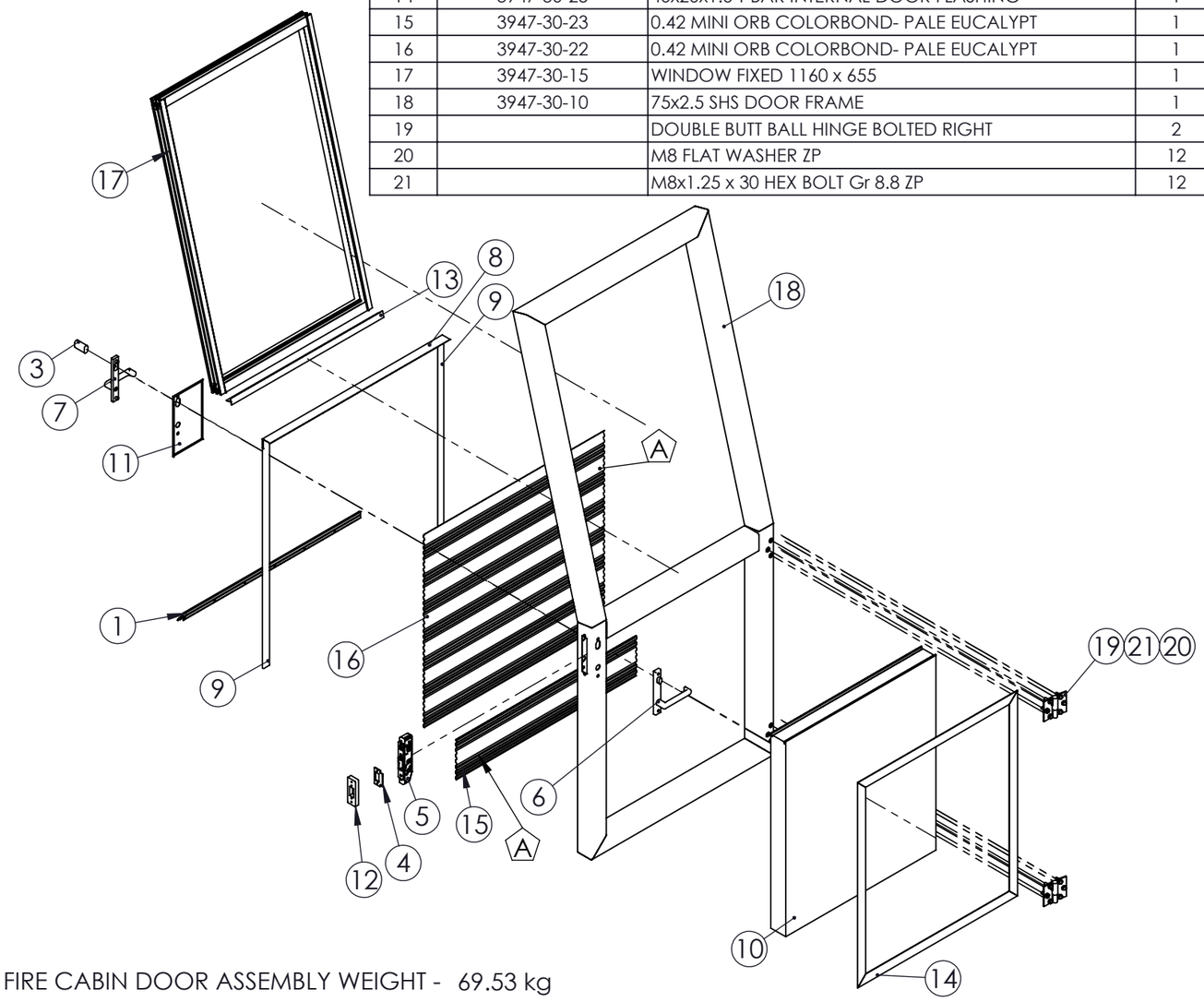

FIRE CABIN DOOR ASSEMBLY WEIGHT - 69.53 kg

UNLESS OTHERWISE SPECIFIED: TOLERANCES: MACHINE + / - 0.25mm FABRICATION + / - 1.0 mm

DIMENSIONS IN MILLIMETRES

THIS DRAWING IS THE PROPERTY OF MECHANICAL ENGINEERING & CAD SERVICES (MECS) Pty Ltd & MUST NOT BE MANUFACTURED FROM,COPIED OR TRANSMITTED TO A THIRD PARTY WITHOUT THE PRIOR APPROVAL FROM MECHANICAL ENGINEERING & CAD SERVICES (MECS) Pty Ltd

MECS
Mechanical Engineering & CAD Services
11 Campbell Place WAGGA NSW 2650
Ph: - 0409 985 816
Email: nick@mecservices.com.au

THIRD ANGLE PROJECTION

CLIENT

RODDY ENGINEERING
14 Waratah St TUMUT NSW 2720
Ph: - 02 6947 4039
Email: roddyeng.com.au

TITLE: FIRE CABIN DOOR ASSEMBLY

DWG NO. 3947-30 | REV A | A3

DRAWN N DE BRUYN | DATE 21/04/2025 | SCALE:1:20 | SHEET 1 OF 1