| ITEM NO. | DESCRIPTION | LENGTH | QTY | MATERIAL | MASS (kg) |
|---|---|---|---|---|---|
| 1 | 20 x 40 x 1.6 x T Bar EXT 2045 | 1586.2 | 1 | 6060-T5 | 0.40 |
| 2 | 20 x 40 x 1.6 x T Bar EXT 2045 | 430.4 | 1 | 6060-T5 | 0.10 |
| 3 | 20 x 40 x 1.6 x T Bar EXT 2045 | 1586.2 | 1 | 6060-T5 | 0.40 |

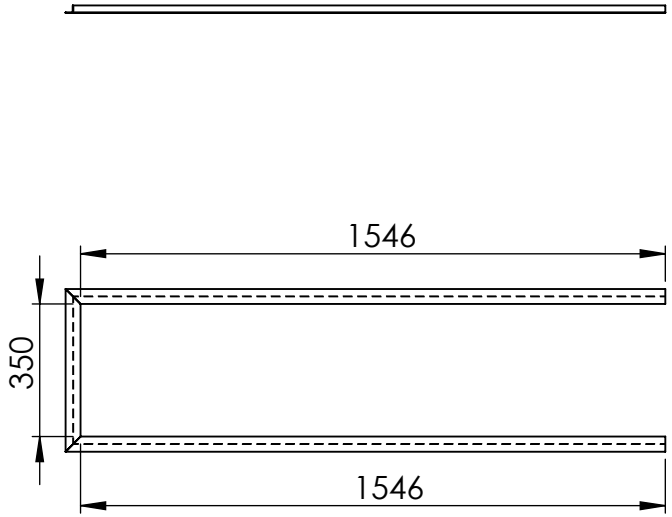


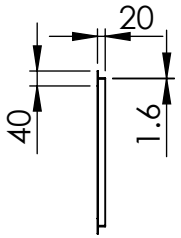


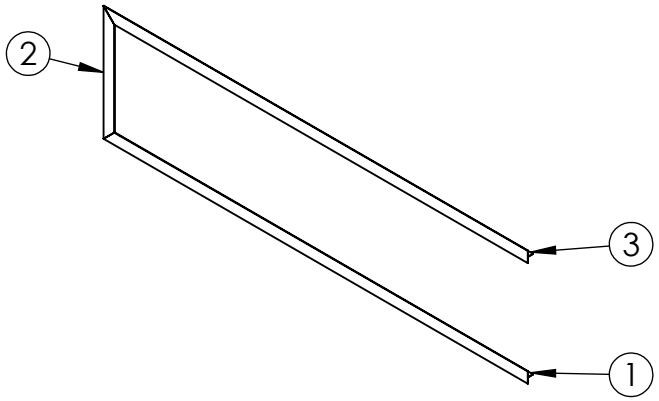


**FINISH** - POWDER COAT
**COLOUR** - SURF MIST

**MATERIAL:-** Extruded Aluminum

UNLESS OTHERWISE SPECIFIED: TOLERANCES: MACHINE + / - 0.25mm FABRICATION + / - 1.0 mm

DIMENSIONS IN MILLIMETRES

THIS DRAWING IS THE PROPERTY OF MECHANICAL ENGINEERING & CAD SERVICES (MECS) Pty Ltd & MUST NOT BE MANUFACTURED FROM,COPIED OR TRANSMITTED TO A THIRD PARTY WITHOUT THE PRIOR APPROVAL FROM MECHANICAL ENGINEERING & CAD SERVICES (MECS) Pty Ltd

MECS
Mechanical Engineering & CAD Services
11 Campbell Place WAGGA NSW 2650
Ph: - 0409 985 816
Email: nick@mecservices.com.au

THIRD ANGLE PROJECTION

WEIGHT: 0.89 kg

CLIENT

RODDY ENGINEERING
14 Waratah St TUMUT NSW 2720
Ph: - 02 6947 4039
Email: roddyeng.com.au

TITLE: 40x20x1.6 T BAR INTERNAL WALL FLASHING

DWG NO. 3947-50-36

A4

DRAWN N DE BRUYN DATE 24/04/2025 SCALE:1:20 SHEET 1 OF 1