ITEM NO.	Description	LENGTH	MATERIAL	MASS (kg)
1	25 x 25 x 1.6 EA UA1094	350	6060-T5	0.07

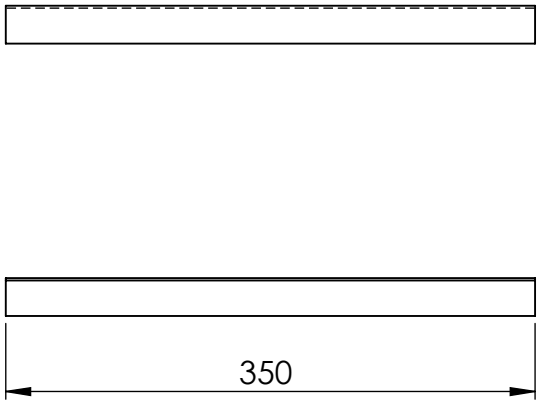

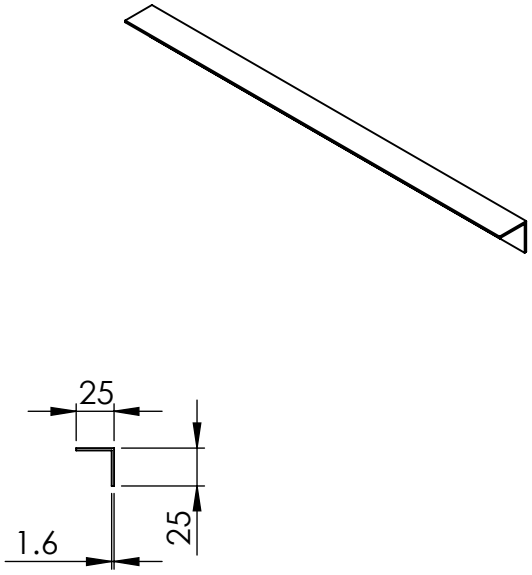

FINISH - POWDER COAT
COLOUR - SURF MIST

MATERIAL:- Extruded Aluminum

UNLESS OTHERWISE SPECIFIED: TOLERANCES: MACHINE + / - 0.25mm FABRICATION + / - 1.0 mm

DIMENSIONS IN MILLIMETRES

THIS DRAWING IS THE PROPERTY OF MECHANICAL ENGINEERING & CAD SERVICES (MECS) Pty Ltd & MUST NOT BE MANUFACTURED FROM,COPIED OR TRANSMITTED TO A THIRD PARTY WITHOUT THE PRIOR APPROVAL FROM MECHANICAL ENGINEERING & CAD SERVICES (MECS) Pty Ltd

MECS
Mechanical Engineering & CAD Services
11 Campbell Place WAGGA NSW 2650
Ph: - 0409 985 816
Email: nick@mecservices.com.au

THIRD ANGLE PROJECTION

WEIGHT: 0.07 kg

CLIENT

RODDY ENGINEERING
14 Waratah St TUMUT NSW 2720
Ph: - 02 6947 4039
Email: roddyeng.com.au

TITLE:

25x25x1.6 EA CORNER CORNICE

DWG NO. 3947-50-42

A4

DRAWN N DE BRUYN DATE 24/04/2025 SCALE:1:5 SHEET 1 OF 1