ITEM	DRAWING No	DESCRIPTION	QTY.	MASS (kg)
1	3947-55-54-11	0.55 BT PALE EUCLYPT BOTTOM WINDOW FLASHING	1	0.5
2	3956-55-54-10	0.55 BT PALE EUCLYPT BOTTOM WINDOW FLASHING	3	1.0
3	3947-55-53-13	0.55 BT PALE EUCLYPT EXTERNAL CORNER	2	0.2
4	3947-55-53-12	0.55 BT PALE EUCLYPT EXTERNAL CORNER	2	0.1
5	3947-55-53-11	0.55 BT PALE EUCLYPT EXTERNAL CORNER	4	0.5
6	3947-55-53-10	0.55 BT PALE EUCLYPT EXTERNAL CORNER	4	0.4
7	3947-55-52	0.55 BT PALE EUCAYLPT WINDOW TOP UNDERLAP	4	0.5
8	3947-55-51	0.55 BT PALE EUCAYLPT CAPPING	2	0.0
9	3947-55-50	0.55 BT PALE EUCAYLPT WINDOW SIDE CAPPING	7	0.2
10	3947-55-43	41x20x25x1.6 ZED DOOR JAM	1	0.7
11	3947-55-42	20 x 21.6 x 25 x 1.6 ZED DOOR JAM	1	0.6
12	3947-55-37	0.42 MINI ORB COLORBOND- PALE EUCALYPT	1	3.7
13	3947-55-36	0.42 MINI ORB COLORBOND- PALE EUCALYPT	1	7.4
14	3947-55-35	0.42 MINI ORB COLORBOND- PALE EUCALYPT	1	5.6
15	3947-55-34	0.42 MINI ORB COLORBOND- PALE EUCALYPT	1	1.3
16	3947-55-33	0.42 MINI ORB COLORBOND- PALE EUCALYPT	1	0.7
17	3947-55-32	0.42 MINI ORB COLORBOND- PALE EUCALYPT	1	1.8
18	3947-55-31	0.42 MINI ORB COLORBOND- PALE EUCALYPT	1	0.7
19	3947-55-30	0.42 MINI ORB COLORBOND- PALE EUCALYPT	1	5.0
20	3947-55-29	0.42 MINI ORB COLORBOND- PALE EUCALYPT	4	1.1
21	3947-55-28	0.42 MINI ORB COLORBOND- PALE EUCALYPT	1	5.5
22	3947-55-27	0.42 MINI ORB COLORBOND- PALE EUCALYPT	3	1.1
23	3947-55-26	0.42 MINI ORB COLORBOND- PALE EUCALYPT	3	3.3
24	3947-55-25	0.42 MINI ORB COLORBOND- PALE EUCALYPT	3	8.8

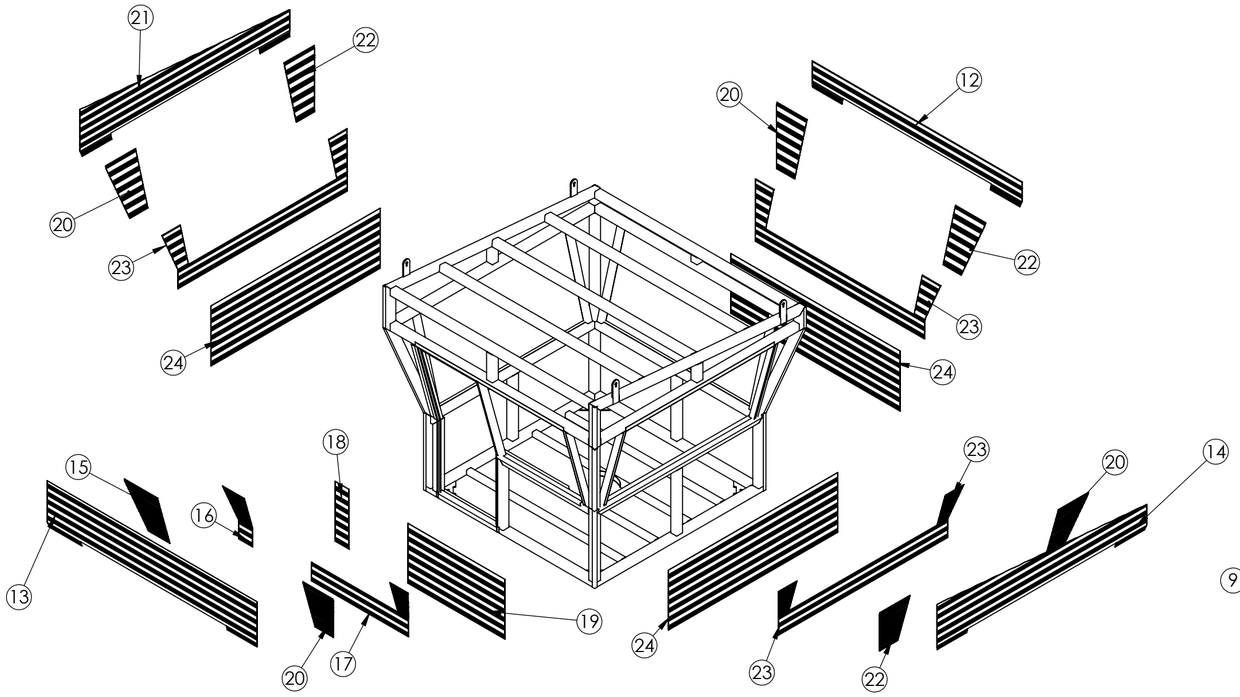

CLADDING INSTALLATION

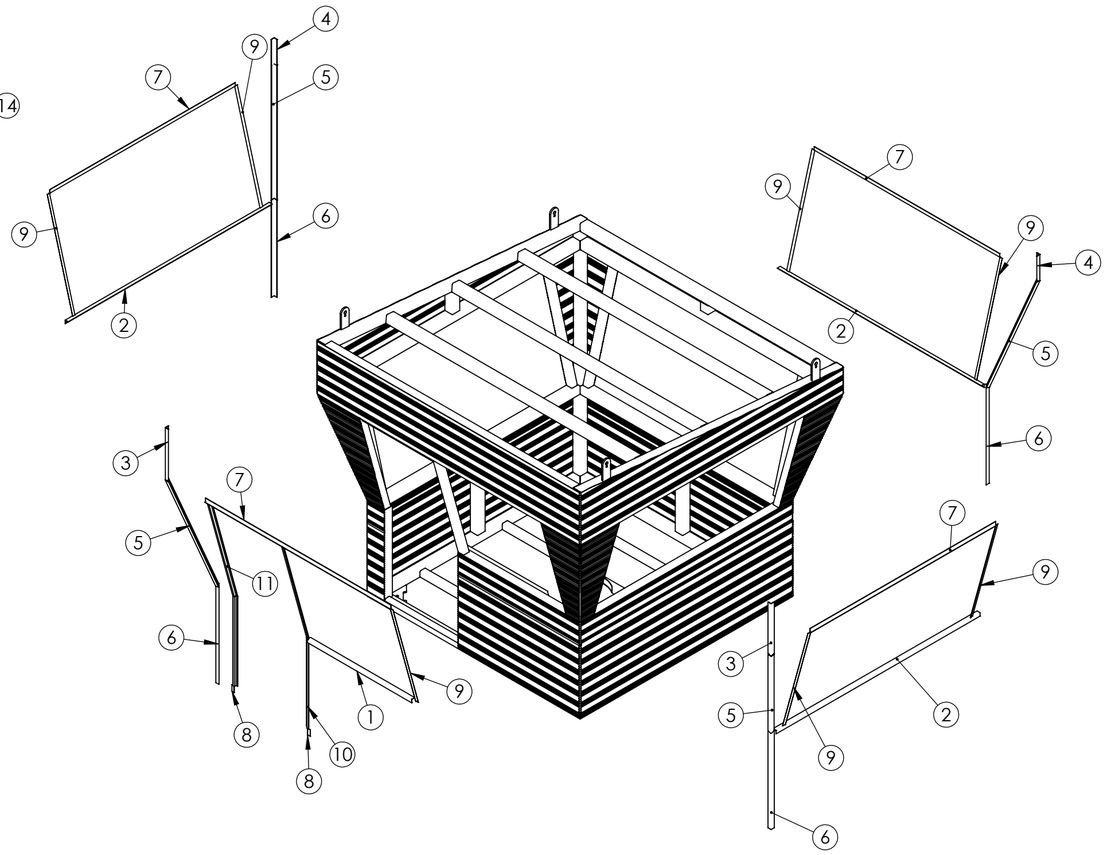

FLASHINGS INSTALLATION

FIRE CABIN OUTSIDE CLADING WEIGHT - 1141.1 kg

UNLESS OTHERWISE SPECIFIED: TOLERANCES: MACHINE + / - 0.25mm FABRICATION + / - 1.0 mm

DIMENSIONS IN MILLIMETRES

THIS DRAWING IS THE PROPERTY OF MECHANICAL ENGINEERING & CAD SERVICES (MECS) Pty Ltd & MUST NOT BE MANUFACTURED FROM,COPIED OR TRANSMITTED TO A THIRD PARTY WITHOUT THE PRIOR APPROVAL FROM MECHANICAL ENGINEERING & CAD SERVICES (MECS) Pty Ltd

MECS
Mechanical Engineering & CAD Services
11 Campbell Place WAGGA NSW 2650
Ph: - 0409 985 816
Email: nick@mecservices.com.au

THIRD ANGLE PROJECTION

WEIGHT: kg

CLIENT

RODDY ENGINEERING
14 Waratah St TUMUT NSW 2720
Ph: - 02 6947 4039
Email: roddyeng.com.au

TITLE: FIRE CABIN OUTSIDE CLADING

DWG NO. 3947-55 REV A2

DRAWN N DE BRUYN DATE 17/04/2025 SCALE:1:50 SHEET 1 OF 1