REVISIONS			
REV.	DESCRIPTION	DATE	APPROVED
A	HEAD BOX TILTED 15 DEGRESS	27/05/2025	TC

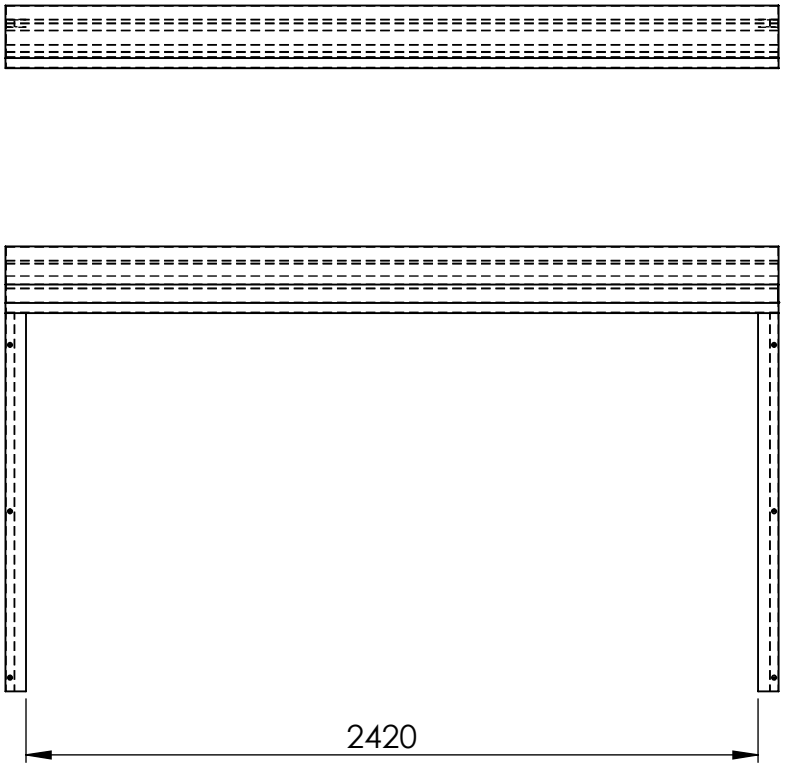

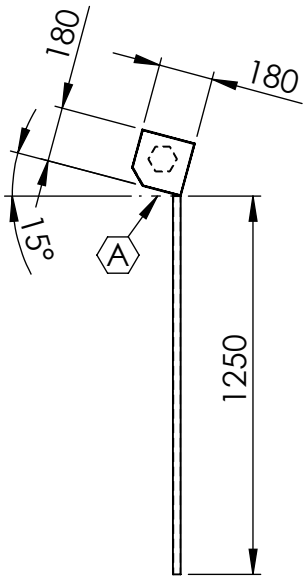

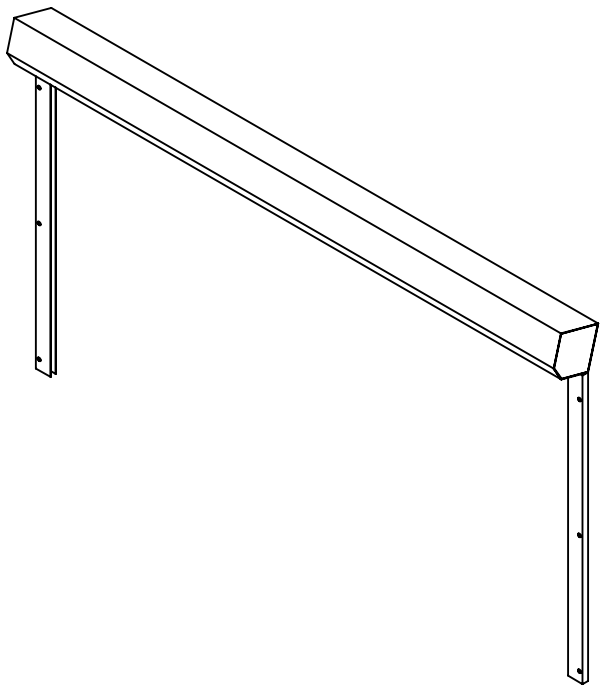

CONTROL TYPE - SPRING LOADED WITH KEYLOCK

DIMENSIONS ARE ONLY APPROXAMATE & REQUIRE CHECKING ON SITE

UNLESS OTHERWISE SPECIFIED: TOLERANCES: MACHINE + / - 0.25mm FABRICATION + / - 1.0 mm

DIMENSIONS IN MILLIMETRES

THIS DRAWING IS THE PROPERTY OF MECHANICAL ENGINEERING & CAD SERVICES (MECS) Pty Ltd & MUST NOT BE MANUFACTURED FROM,COPIED OR TRANSMITTED TO A THIRD PARTY WITHOUT THE PRIOR APPROVAL FROM MECHANICAL ENGINEERING & CAD SERVICES (MECS) Pty Ltd

MECS
Mechanical Engineering & CAD Services
11 Campbell Place WAGGA NSW 2650
Ph: - 0409 985 816
Email: nick@mecservices.com.au

THIRD ANGLE PROJECTION

WEIGHT: 33.00 kg

CLIENT

RODDY ENGINEERING
14 Waratah St TUMUT NSW 2720
Ph: - 02 6947 4039
Email: roddyeng.com.au

TITLE: CYCLONE SHUTTER - CW PRODUCTS

DWG NO.	REV	
3947-70-05	A	A4

DRAWN	DATE	SCALE	SHEET
N DE BRUYN	26/04/2025	1:25	1 OF 1