ITEM	DRAWING No	DESCRIPTION	QTY.	MASS (kg)
1	3947-80-10	3 THK STUDDED RUBBER MATTING	1	9
2	3947-80-15	3 THK STUDDED RUBBER MATTING	1	10

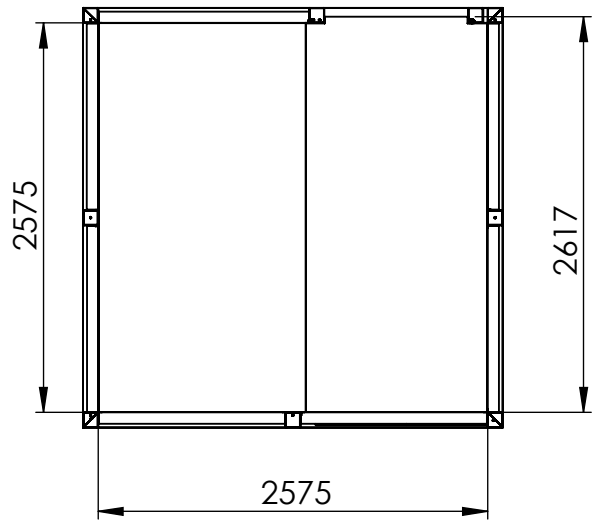

PLAN VIEW

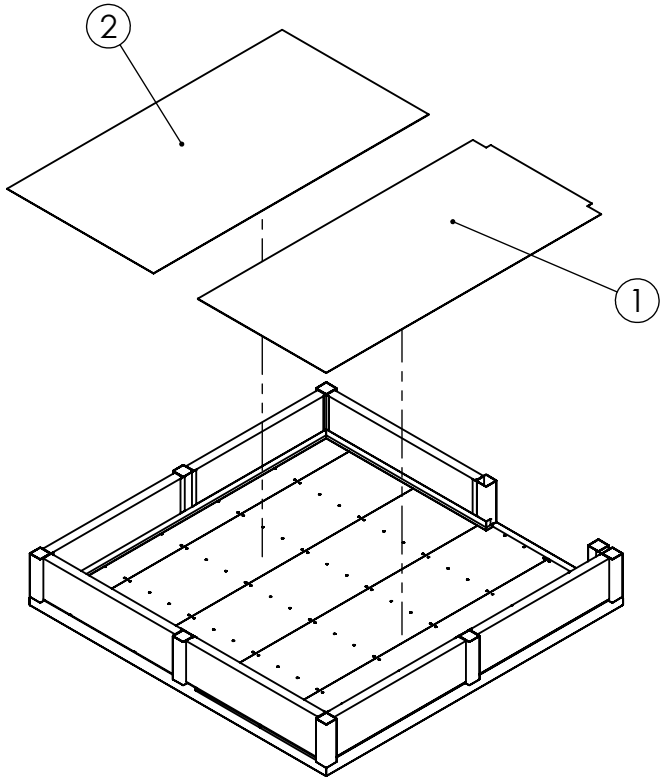

UNLESS OTHERWISE SPECIFIED: TOLERANCES: MACHINE + / - 0.25mm FABRICATION + / - 1.0 mm

DIMENSIONS IN MILLIMETRES

THIS DRAWING IS THE PROPERTY OF MECHANICAL ENGINEERING & CAD SERVICES (MECS) Pty Ltd & MUST NOT BE MANUFACTURED FROM,COPIED OR TRANSMITTED TO A THIRD PARTY WITHOUT THE PRIOR APPROVAL FROM MECHANICAL ENGINEERING & CAD SERVICES (MECS) Pty Ltd

MECS
Mechanical Engineering & CAD Services
11 Campbell Place WAGGA NSW 2650
Ph: - 0409 985 816
Email: nick@mecservices.com.au

THIRD ANGLE PROJECTION

WEIGHT: kg

CLIENT

RODDY ENGINEERING
14 Waratah St TUMUT NSW 2720
Ph: - 02 6947 4039
Email: roddyeng.com.au

TITLE:

FIRE CABIN FLOORING

DWG NO. 3947-80

A4

DRAWN N DE BRUYN DATE 4/09/2025 SCALE:1:50 SHEET 1 OF 1