DIMENSIONS IN MILLIMETRES

ITEM	DRAWING No	DESCRIPTION	QTY.	MASS (kg)
1	3952-50-14	DOOR JAM TO SUIT 1075 HIGH FRAME	2	2
2	3952-50-13	DOOR JAM TO SUIT 805 WIDE FRAME	2	2
3	3952-50-20	50x5 FB SILL PACKING SUPPORT	6	0

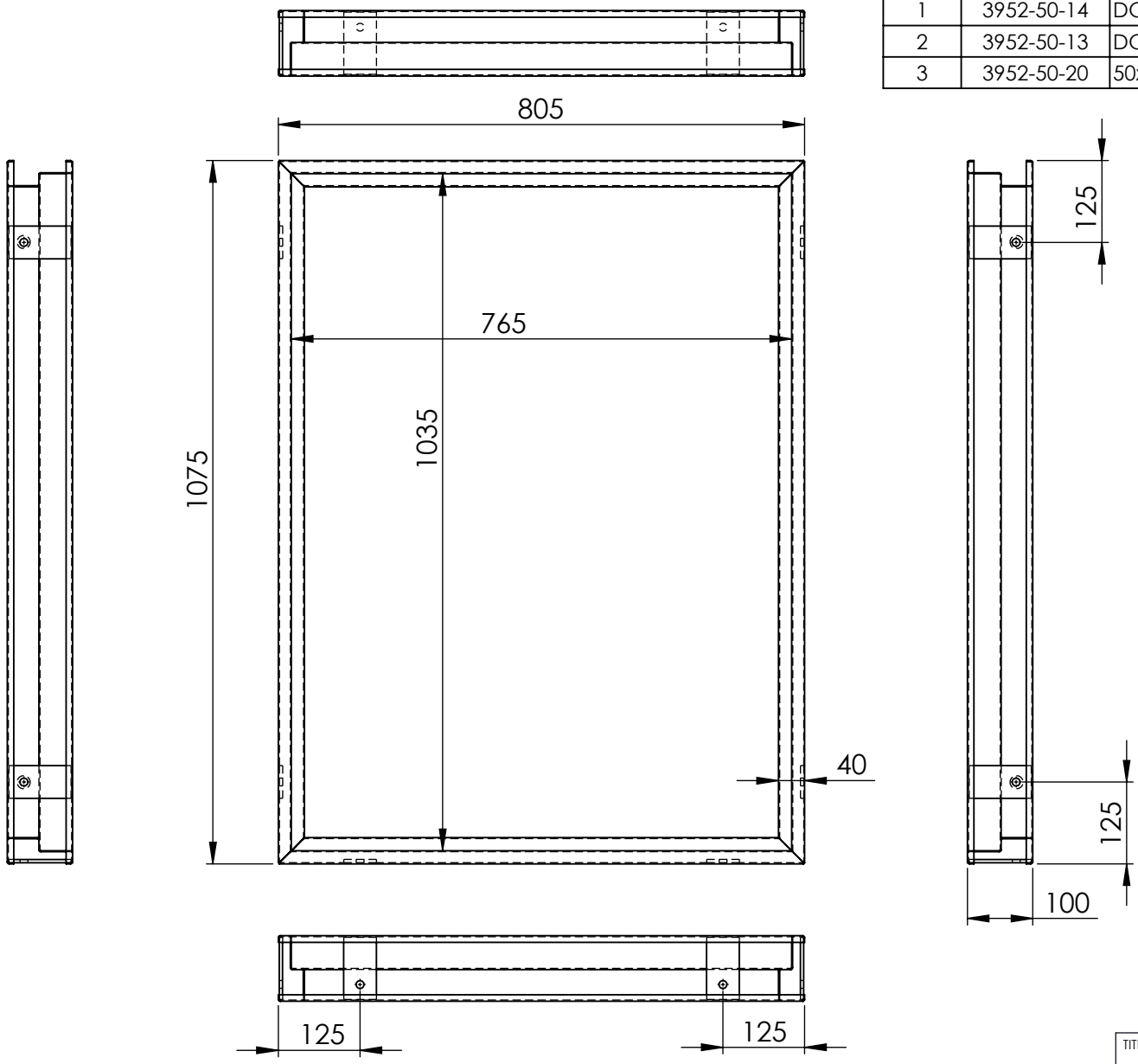

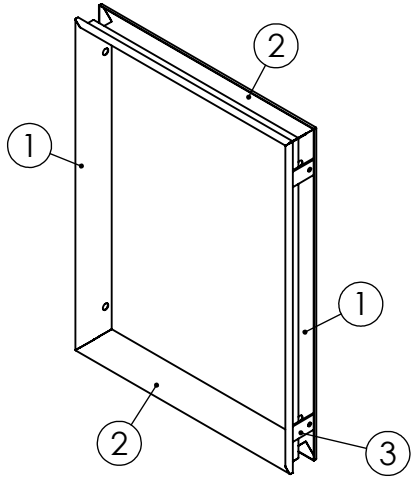

UNLESS OTHERWISE SPECIFIED: TOLERANCES: MACHINE + / - 0.25mm FABRICATION + / - 1.0 mm

THIS DRAWING IS THE PROPERTY OF MECHANICAL ENGINEERING & CAD SERVICES (MECS) Pty Ltd & MUST NOT BE MANUFACTURED FROM,COPIED OR TRANSMITTED TO A THIRD PARTY WITHOUT THE PRIOR APPROVAL FROM MECHANICAL ENGINEERING & CAD SERVICES (MECS) Pty Ltd

THIRD ANGLE PROJECTION

WEIGHT: 9 Kg

MECS
Mechanical Engineering & CAD Services
11 Campbell Place WAGGA NSW 2650
Ph: - 0409 985 816
Email: nick@mecservices.com.au

TITLE: DOOR JAM ASSEMBLIED 1075 H x 805 W

DWG NO. 3952-15-10 REV A4

DRAWN N DE BRUYN DATE 8/05/2025 SCALE:1:10 SHEET 1 OF 1