DIMENSIONS IN MILLIMETRES

ITEM	DRAWING No	DESCRIPTION	QTY.	MASS (kg)
1	3952-70-14	740 WIDE LOURVE WITH SLOT FOR LATCH	1	1
2	3952-70-13	LOURVE 740 WIDE - TO SUIT 755 WIDE FRAME	15	1
3	3952-65-13	NIGHT LATCH INSIDE PLATE	1	0
4	3952-65-12	NIGHT LATCH OUTSIDE PLATE	1	0
5	3952-60-14	CHANNEL TO SUIT 1025 HIGH DOOR	2	1
6	3952-60-13	CHANNEL TO SUIT 755 WIDE DOOR	2	1

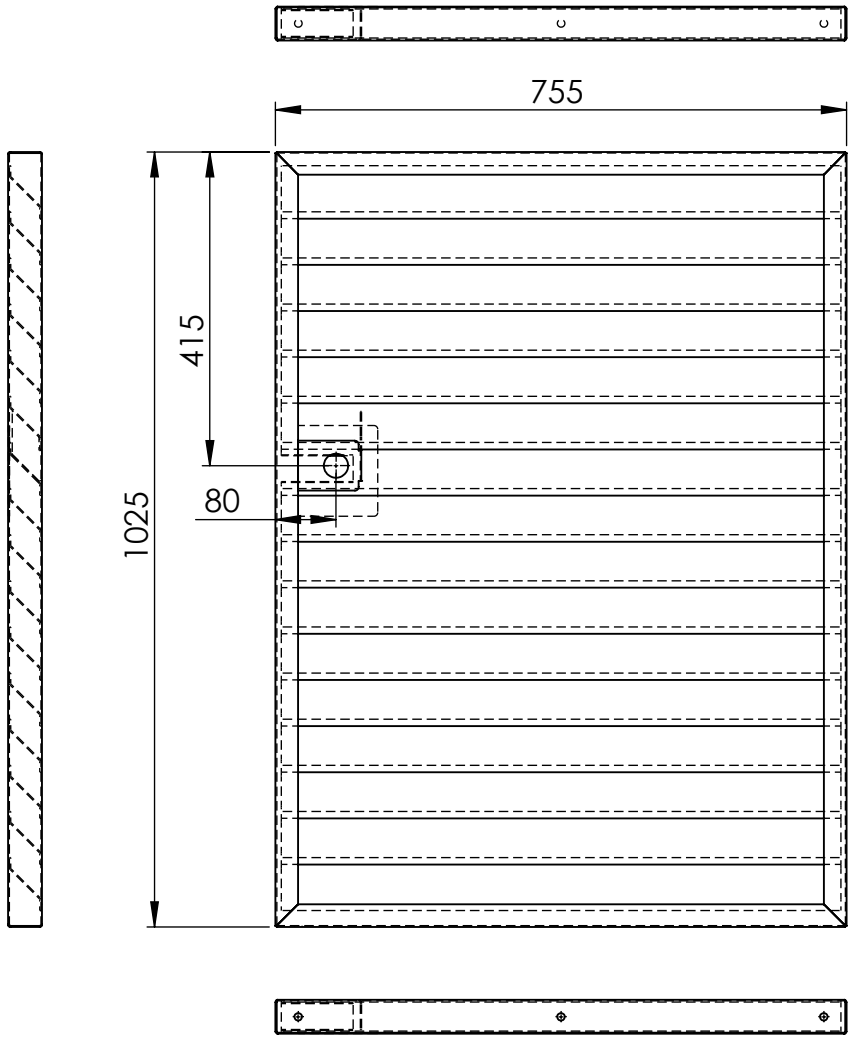

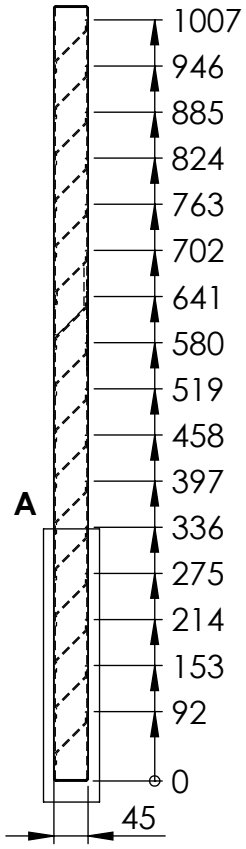

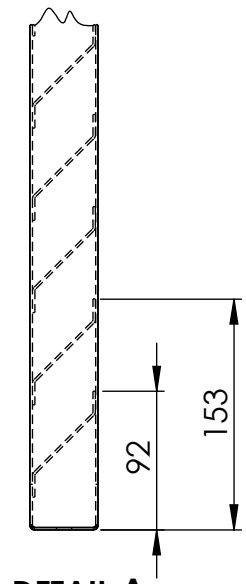

DETAIL A
SCALE 1 : 5

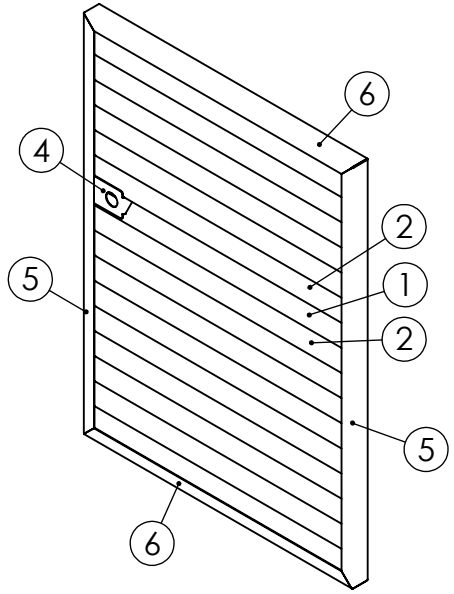

UNLESS OTHERWISE SPECIFIED: TOLERANCES: MACHINE + / - 0.25mm FABRICATION + / - 1.0 mm

THIS DRAWING IS THE PROPERTY OF MECHANICAL ENGINEERING & CAD SERVICES (MECS) Pty Ltd & MUST NOT BE MANUFACTURED FROM,COPIED OR TRANSMITTED TO A THIRD PARTY WITHOUT THE PRIOR APPROVAL FROM MECHANICAL ENGINEERING & CAD SERVICES (MECS) Pty Ltd

THIRD ANGLE PROJECTION

WEIGHT: 17 Kg

MECS
Mechanical Engineering & CAD Services
11 Campbell Place WAGGA NSW 2650
Ph: - 0409 985 816
Email: nick@mecservices.com.au

TITLE:
DOOR ASSEMBLIED 755W x1025H

DWG NO. 3952-15-20 REV A4

DRAWN N DE BRUYN DATE 8/05/2025 SCALE:1:10 SHEET 1 OF 1