DIMENSIONS IN MILLIMETRES

ITEM NO.	MATERIAL	METAL THICKNESS	MASS (kg)
1	MS ZINC ANNEAL PLATE	1.6	0.1

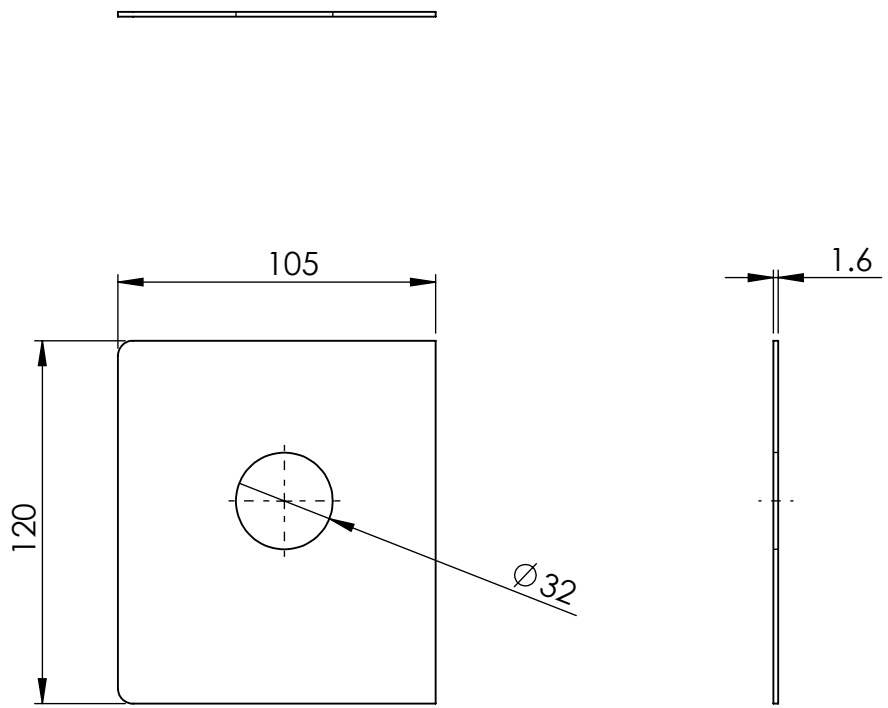

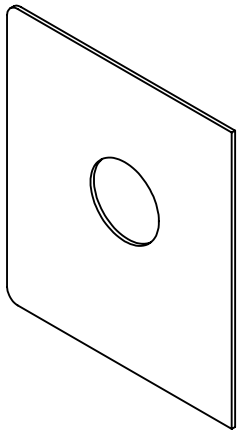

MATERIAL:- MS ZINC ANNEAL PLATE

UNLESS OTHERWISE SPECIFIED: TOLERANCES: MACHINE + / - 0.25mm FABRICATION + / - 1.0 mm

THIS DRAWING IS THE PROPERTY OF MECHANICAL ENGINEERING & CAD SERVICES (MECS) Pty Ltd & MUST NOT BE MANUFACTURED FROM,COPIED OR TRANSMITTED TO A THIRD PARTY WITHOUT THE PRIOR APPROVAL FROM MECHANICALENGINEERING & CAD SERVICES (MECS) Pty Ltd

THIRD ANGLE PROJECTION

WEIGHT: 0.1 Kg

MECS
Mechanical Engineering & CAD Services
11 Campbell Place WAGGA NSW 2650
Ph: - 0409 985 816
Email: nick@mecservices.com.au

TITLE: NIGHT LATCH INSIDE PLATE

DWG NO. 3952-65-13 A4

DRAWN N DE BRUYN DATE 14/06/2025 SCALE:1:2.5 SHEET 1 OF 2