DIMENSIONS IN MILLIMETRES

ITEM NO.	DESCRIPTION	LENGTH	QTY	MASS (kg)
1	50x50x2.5 SHS	3130	2	11.20
2	50x50x2.5 SHS	2470	2	8.84
3	50x50x2.5 SHS	1095	4	3.92
4	50x50x2.5 SHS	1900	4	6.80
5	50x50x2.5 SHS	1000	7	3.40
6	50x50x2.5 SHS	425	4	1.34

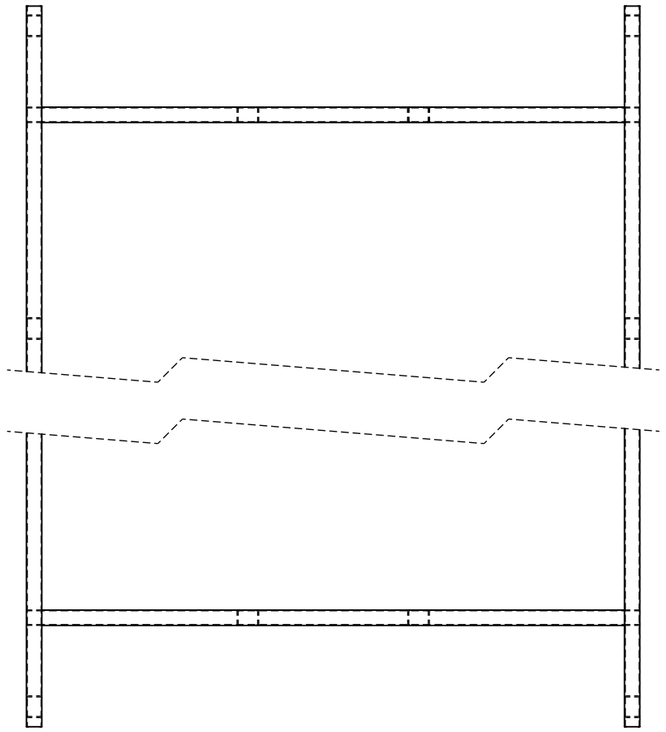

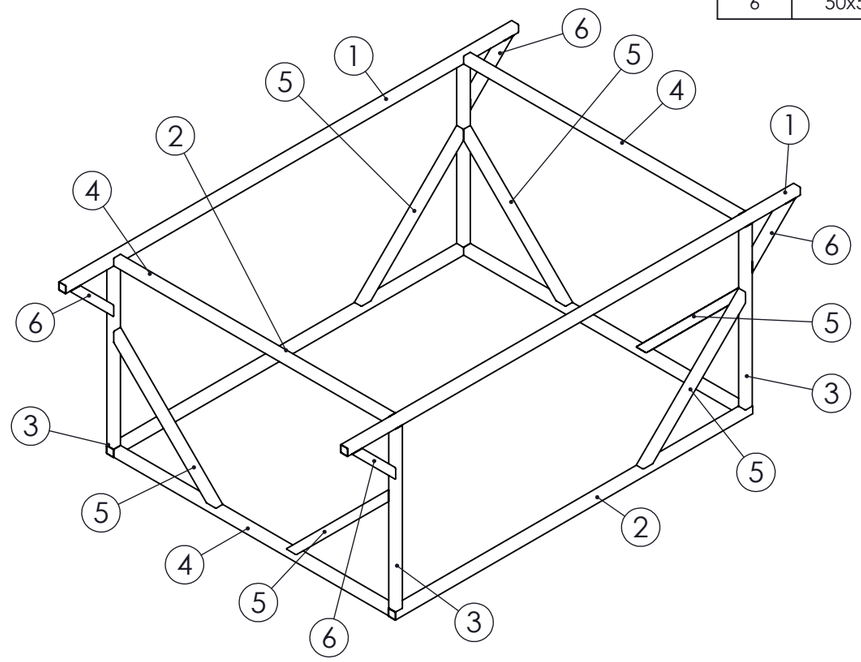

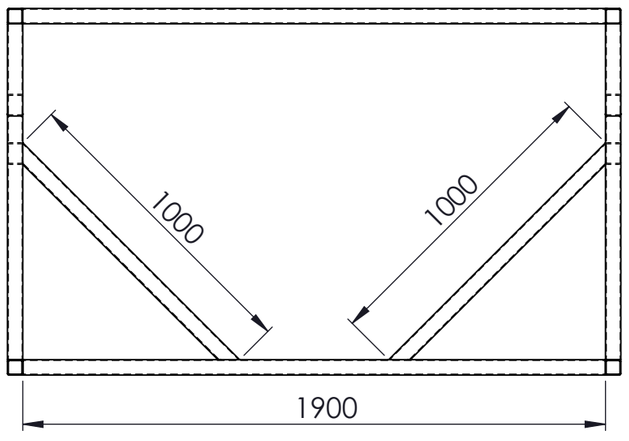

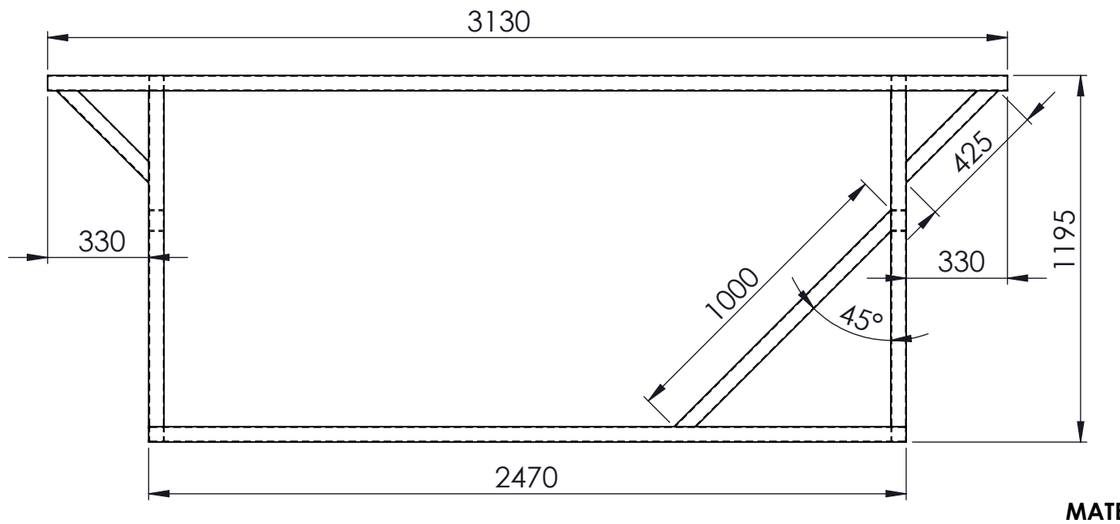

MATERIAL:- MILD STEEL

50x2.5 SHS ROOF SUPPORT FRAME WEIGHT - 112.15 kg

UNLESS OTHERWISE SPECIFIED: TOLERANCES: MACHINE + / - 0.25mm FABRICATION + / - 1.0 mm

DIMENSIONS IN MILLIMETRES

THIS DRAWING IS THE PROPERTY OF MECHANICAL ENGINEERING & CAD SERVICES (MECS) Pty Ltd & MUST NOT BE MANUFACTURED FROM,COPIED OR TRANSMITTED TO A THIRD PARTY WITHOUT THE PRIOR APPROVAL FROM MECHANICAL ENGINEERING & CAD SERVICES (MECS) Pty Ltd

MECS
Mechanical Engineering & CAD Services
11 Campbell Place WAGGA NSW 2650
Ph: - 0409 985 816
Email: nick@mecservices.com.au

THIRD ANGLE PROJECTION

CLIENT

RODDY ENGINEERING
14 Waratah St TUMUT NSW 2720
Ph: - 02 6947 4039
Email: roddyeng.com.au

TITLE: 50x2.5 SHS ROOF SUPPORT FRAME

DWG NO. 3956-15-35-10 REV A3

DRAWN N DE BRUYN DATE 24/08/2025 SCALE:1:20 SHEET 1 OF 1