ITEM	DRAWING No	DESCRIPTION	QTY.	MASS (kg)
1	OEM-M8-NS-HD	M8x1.25 NUTSERT LARGE FLANGE HEAD 0.7-3.8mm GRIP	6	0.01
2	3956-25	ROOF FRAME ASSEMBLIED	1	269
3	3956-20-25	BOTTOM DOOR JAM	1	1
4	3956-20	FLOOR FRAMING ASSEMBLY	1	287
5	3956-15-55	50x2.5 DURAGAL EA SHUTTER MOUNT	1	2
6	3956-15-50	75x3 SHS SPACER	1	0
7	3956-15-45	75x3 SHS DOOR JAMB LS	1	15
8	3956-15-40	75x50x3 RHS WINDOW RS STUD	4	6
9	3956-15-25	75x3 SHS WINDOW FRAME SIDE	2	7
10	3956-15-20	75 x 3 SHS DURAGAL CORNER	4	8
11	3956-15-15	75x50x3 RHS WINDOW LS STUD	3	6
12	3956-15-60	50x2.5 DURAGAL EA	1	2
13	3956-15-65	50x2.5 DURAGAL EA	1	2

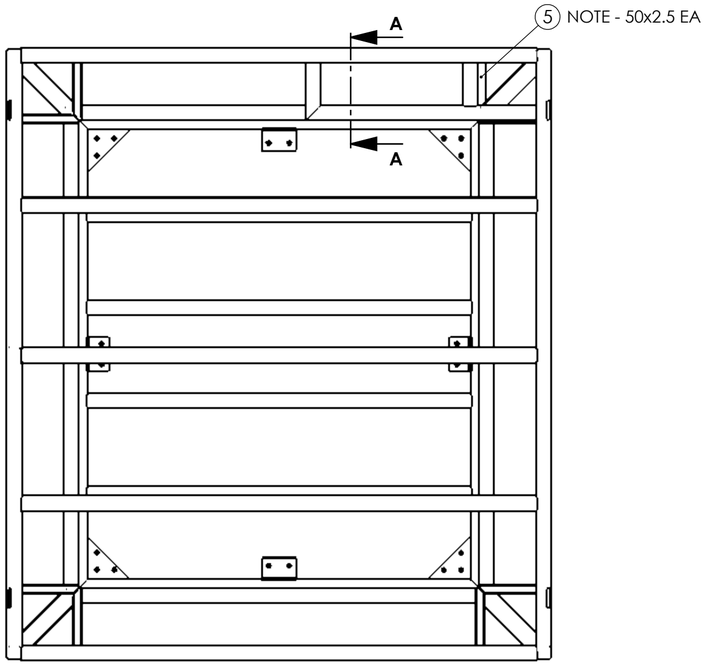

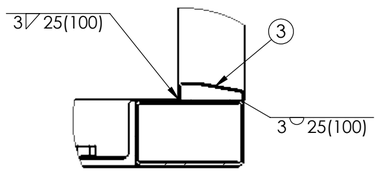

DETAIL C
SCALE 1 : 5

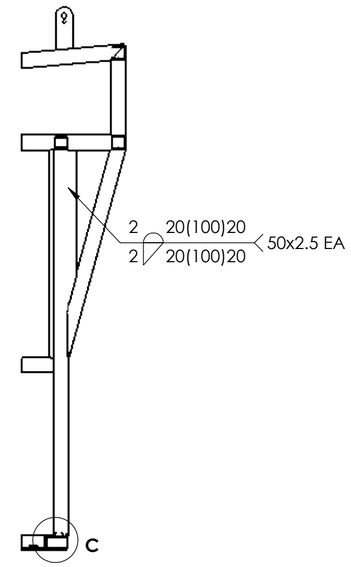

SECTION A-A

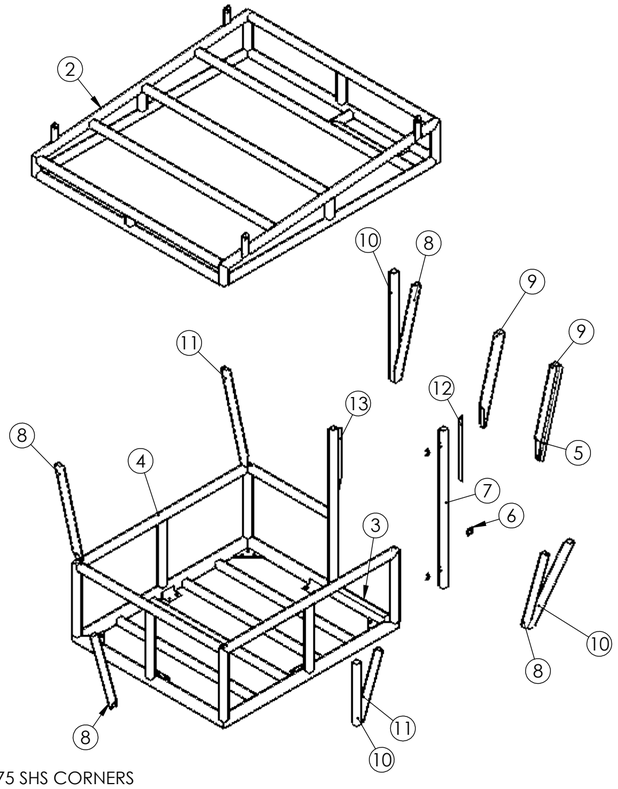

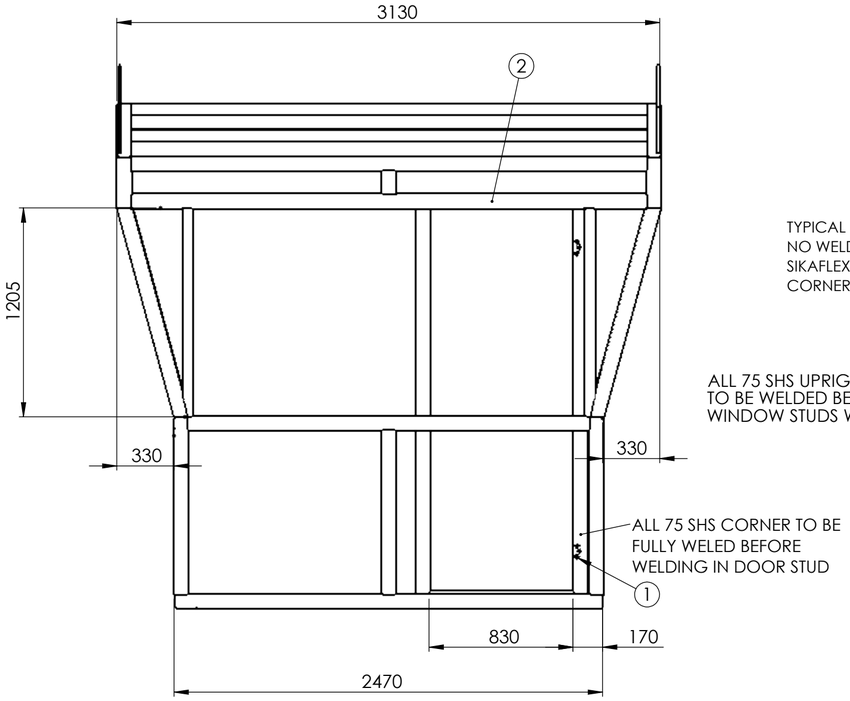

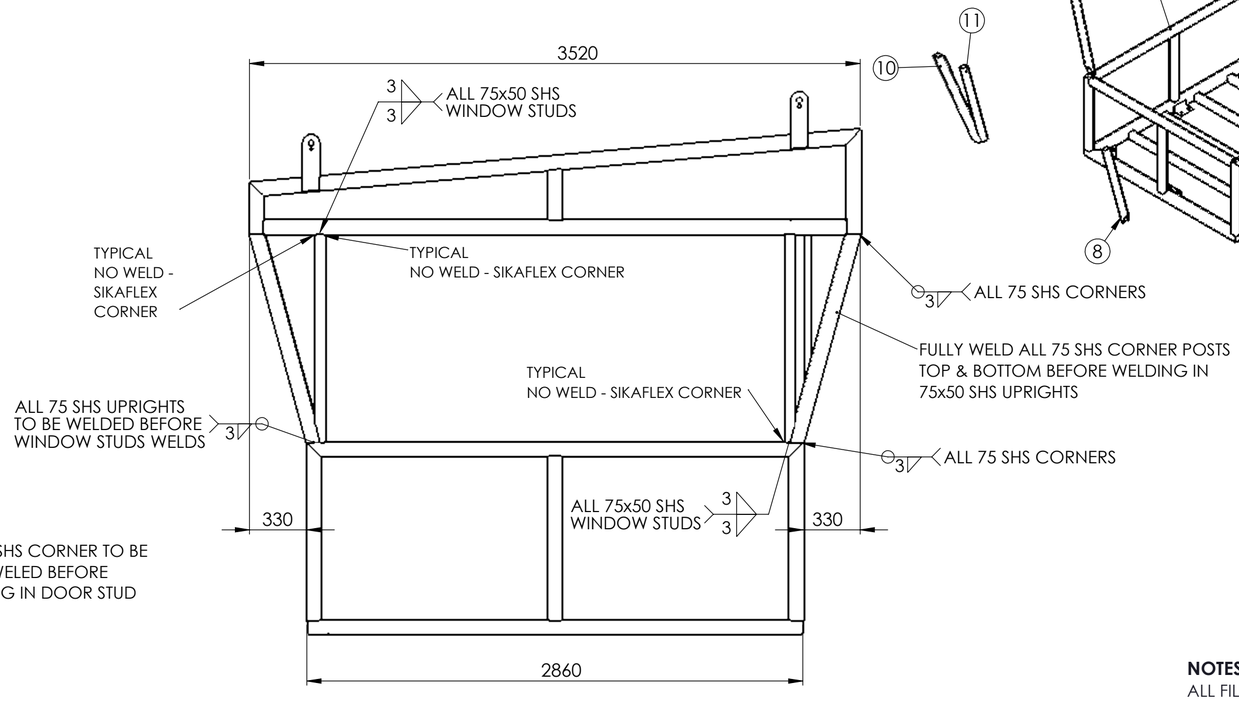

NOTES - UNO
ALL FILLET WELDS SHALL BE 3mm CONTINUOUS
ALL BUTT WELDS SHALL BE FULL PENETRATION
ALL WELDS, CUTS AND HOLES SHALL BE TREATED WITH 2 COATS OF ZINC RICH PRIMER

FIRE CABIN FRAME ASSEMBLY WEIGHT - 672 kg

UNLESS OTHERWISE SPECIFIED: TOLERANCES: MACHINE + / - 0.25mm FABRICATION + / - 1.0 mm

DIMENSIONS IN MILLIMETRES

THIS DRAWING IS THE PROPERTY OF MECHANICAL ENGINEERING & CAD SERVICES (MECS) Pty Ltd & MUST NOT BE MANUFACTURED FROM,COPIED OR TRANSMITTED TO A THIRD PARTY WITHOUT THE PRIOR APPROVAL FROM MECHANICAL ENGINEERING & CAD SERVICES (MECS) Pty Ltd

MECS
Mechanical Engineering & CAD Services
11 Campbell Place WAGGA NSW 2650
Ph: - 0409 985 816
Email: nick@mecservices.com.au

THIRD ANGLE PROJECTION

WEIGHT: kg

CLIENT
RODDY ENGINEERING
14 Waratah St TUMUT NSW 2720
Ph: - 02 6947 4039
Email: roddyeng.com.au

TITLE: FIRE CABIN FRAME ASSEMBLY

DWG NO. 3956-15 REV A2

DRAWN N DE BRUYN DATE 25/07/2025 SCALE:1:25 SHEET 1 OF 1